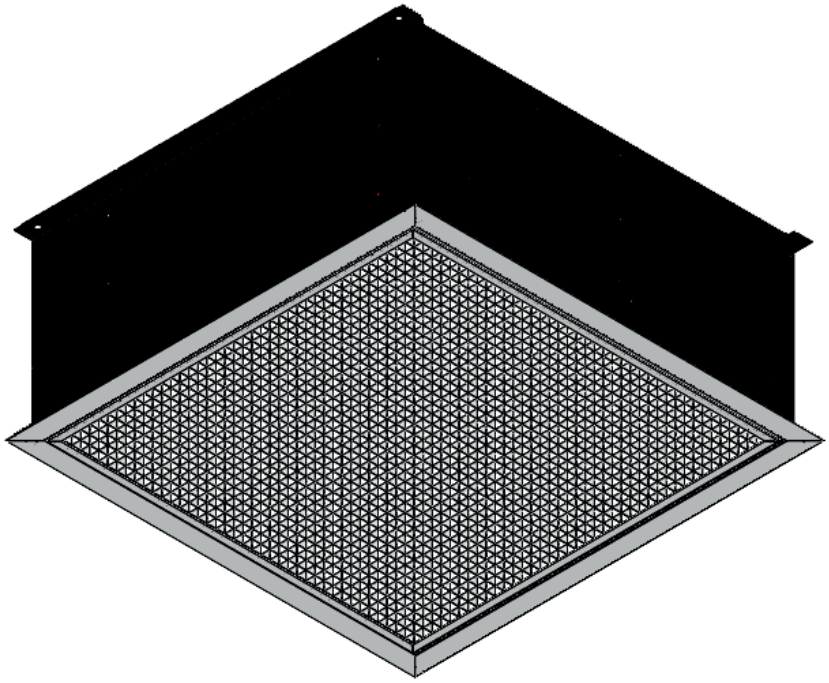

Belgravia Tilevector Plus

Installation, Operation & Maintenance Manual

IOM 85 Issue 4

SPC

Contents

		Page
1	General	3
1.1	Description	3
1.2	Receipt and Preparation	3
2	Installation	3
2.1	Mounting general	3
2.2	Installation in suspended/T bar ceiling	3
2.3	Installation in finished/plasterboard ceiling	5
2.4	Free-hanging	5
3	Fluid piping	6
4	Wiring	8
5	Control	8
6	Commissioning	9
7	Maintenance	9
8	Fault finding	10
9	Disposal	10

1. General

1.1 Description

The Belgravia Tilevector Plus is a self-contained fan convector heater designed for recessed installation into suspended T bar or plasterboard ceiling. The unit can be freely suspended if required. The unit is designed for use against low grade hot water temperatures associated with heat pumps and condensing boilers.

Model	Solo Plus	Duo Plus
Size WxLxH	595mm x 595mm x 260mm	1195mm x 595mm x 260mm
Weight	20kg	35kg
Power supply	230V/1Ph/50Hz	230V/1Ph/50Hz
Fan type	Forward curved double inlet	Forward curved double inlet
Motor type	EC (brushless DC)	EC (brushless DC)
Maximum power draw	38W	76W
Hot water connections	15mm copper	15mm copper

Table 1. General specification

1.2 Receipt and Preparation

The units are wrapped and display the SPC works order number, model reference, site reference (where appropriate) and site details.

On receipt check that all details are correct to the customer schedules prior to opening the packaging. Damages should be reported to the carrier and to the SPC Sales Office immediately.

It is recommended that the packaging is kept in place and the units stored in a safe area until the necessary services are complete in order to avoid the possibility of site damage.

2. Installation

2.1. Mounting general

Units should be installed at a minimum of 1.8m above the floor and a recommended maximum height of 3m.

2.2. Installation in suspended/T bar ceiling

The Tilevector Solo Plus has a nominal size of 600mm x 600mm and is suitable for replacing a standard ceiling tile. The Tilevector Duo Plus has a nominal size of 1200mm x 600mm and is suitable for replacing two standard tiles. The inlet/outlet eggcrate grille will sit inside the suspension bars and the grille core is hinged to allow internal access. Ceiling tiles adjacent to the position of the unit should be removed during installation to allow unimpeded access around the exterior of the unit.

The units are suitable for suspension using either rod or wire but always of a gauge commensurate with the weight of the unit shown above. Having marked and fitted ceiling anchors the unit should be secured to these via the holes provided in the turned out flanges on the top of the casing. The grille is laid onto the suspensions/T bars and the height of the suspended unit can then be adjusted to fit around the flanges of the grille.

Ensure that the grille is oriented in such a way that the hinge is on the side indicated or it will not sit flush or open properly.

The unit must not be allowed to rest just on the suspended ceiling without attachment to the soffit/main ceiling which is load bearing.

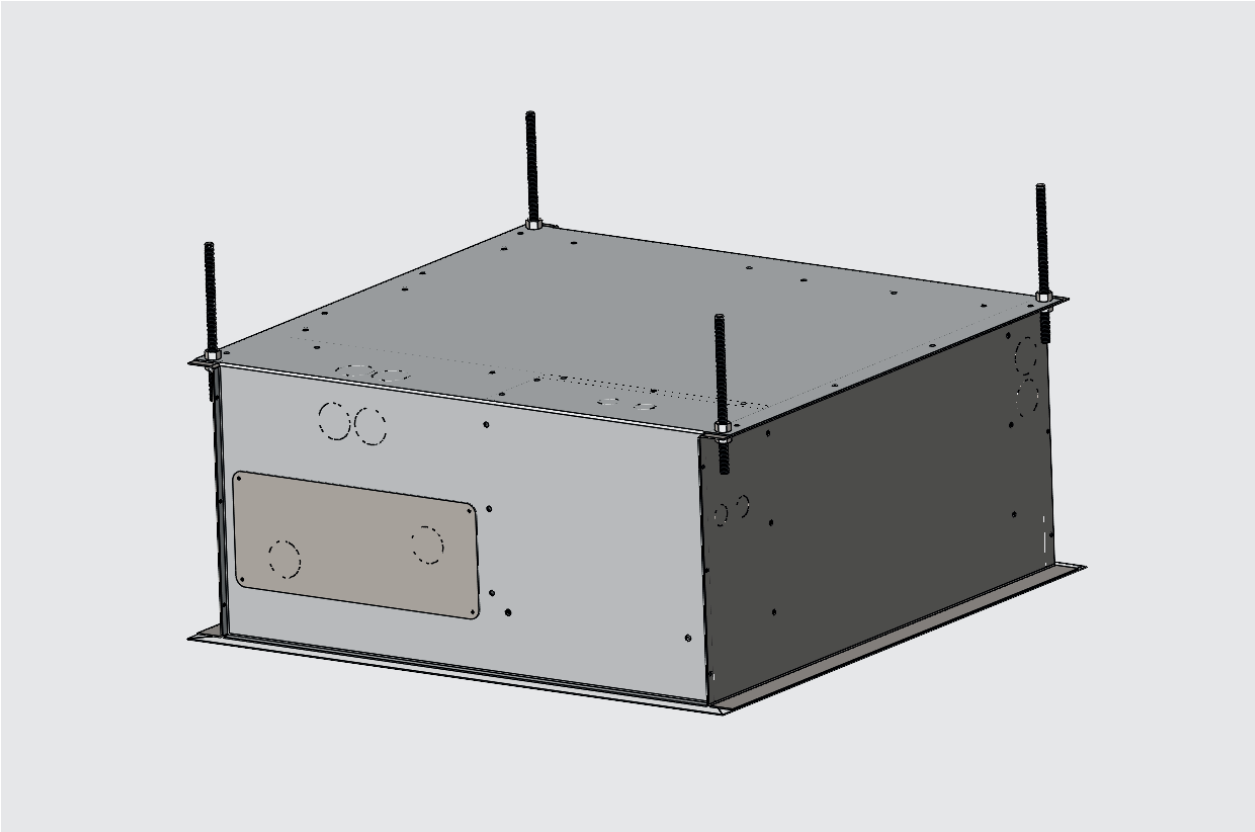

Figure 1. Ceiling mounting (Solo Plus unit shown)

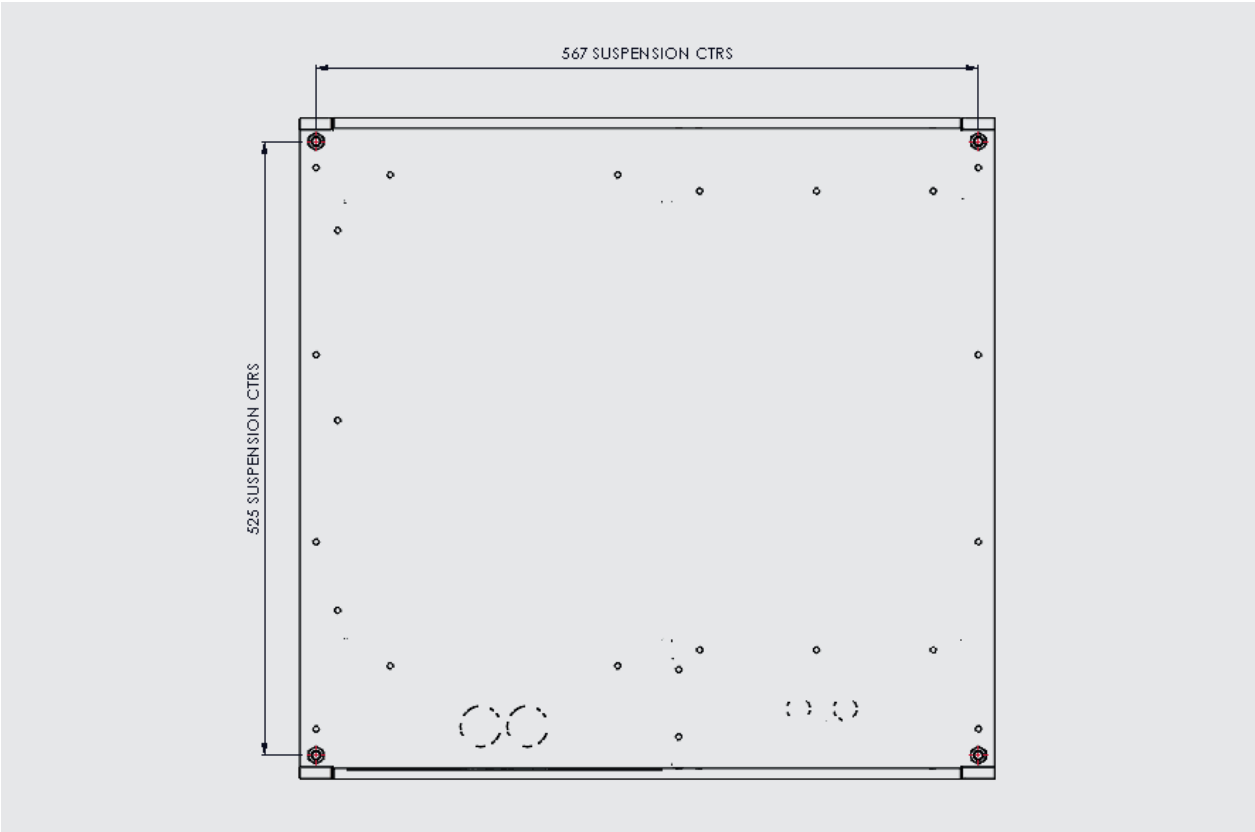

Figure 2a. Mounting hole positions Solo Plus unit

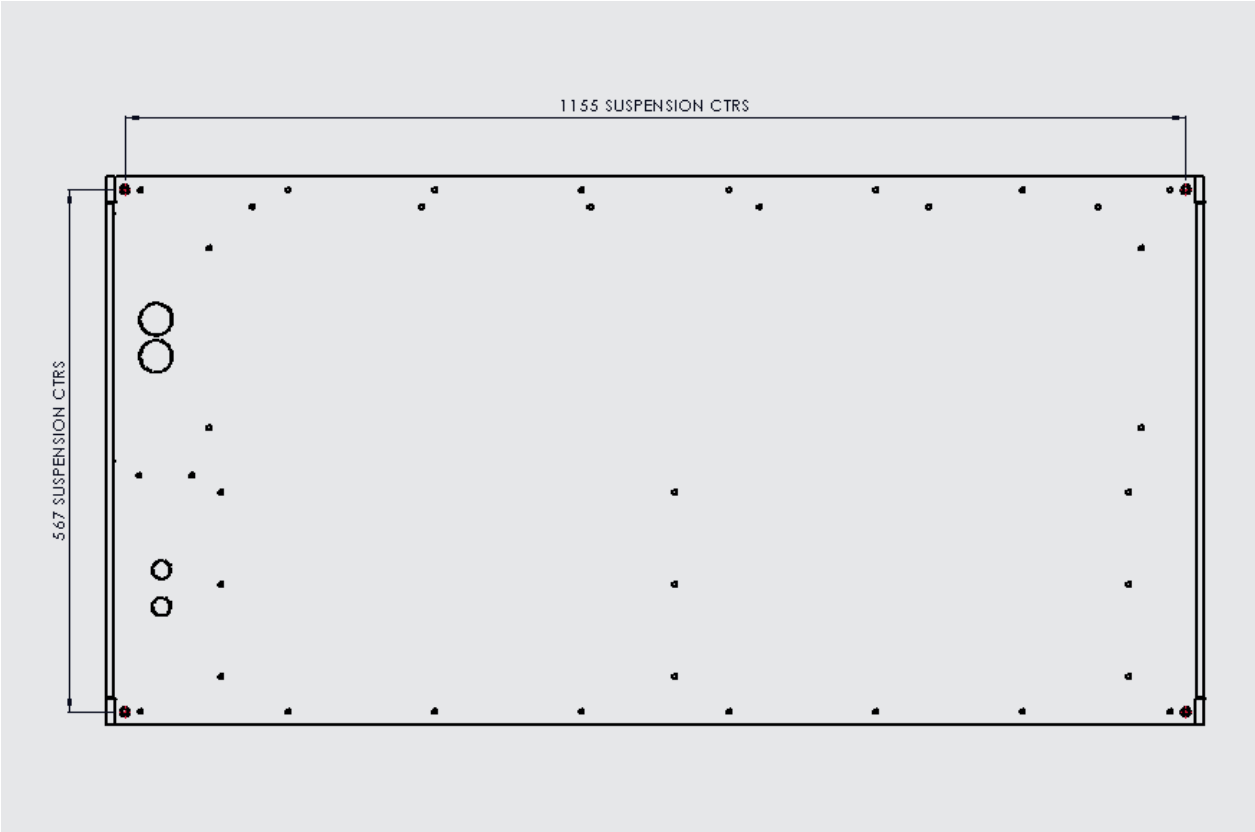

Figure 2b. Mounting hole positions Duo Plus unit

2.3. Installation in finished/plasterboard ceiling

The same four suspension holes on the flanges of the casing are used as above and the ceiling needs to be marked out and appropriate anchors fitted.

The plasterboard needs to be cut prior to installing the unit; an aperture of 575mm x 575mm is required for the Solo Plus unit and 1175mm x 575mm for the Duo Plus unit.

The unit should be passed through the plasterboard and secured to the ceiling using rod or wires attached to the anchors. The height of the unit should then be adjusted such that it finishes just above the level of the plasterboard.

The grille is located just below the plasterboard and pushed upwards such that the flanges of the grille pass into the unit itself. A 3.5mm bit should be used in 4 places (2 on one side, 2 opposite) and drilled through the grille and unit sides to be used to hold the grille in position. The 3.5mm holes in the grille flange should be opened out to 5mm and No.8 screws used to hold it in position.

2.4. Free-hanging

While the units are intended for recessed installation they can be free-hanging if required. The units should be suspended from the ceiling as above and the grille attached to the unit as in the instructions for plasterboard installation given above.

3. Fluid piping

The unit is supplied with a heat exchanger which terminates in 15mm copper pipes. When installed it is important that the flow and return are made to the correct connection in order to optimise the heat output of this unit. The flow connection must be made on the upper connection and the return on the lower connection. See diagram below.

There is an aperture on the side of the unit adjacent to the internal pipe terminations. This is held in place by self-tapping screws and can be removed when piping up to provide enhanced access. Flexible connectors are ideal for the final connection to the unit; these can be push-fit or compression. Particularly for push-fit connections, but in general, the ends of the pipes must be subject to a final deburr and rounding to ensure a robust joint.

The upper flow connection will be connected to pipework which is likely to form a high point and air vents should be fitted in the pipework at high points to prevent any airlocks. Air vents should be automatic unless they are to be regularly serviced.

There are a number of knock-outs provided in the unit casing and these can be used to introduce the pipework. Alternatively holes can be cut in the sides or top of the unit though care must be exercised so as not to damage any internal components.

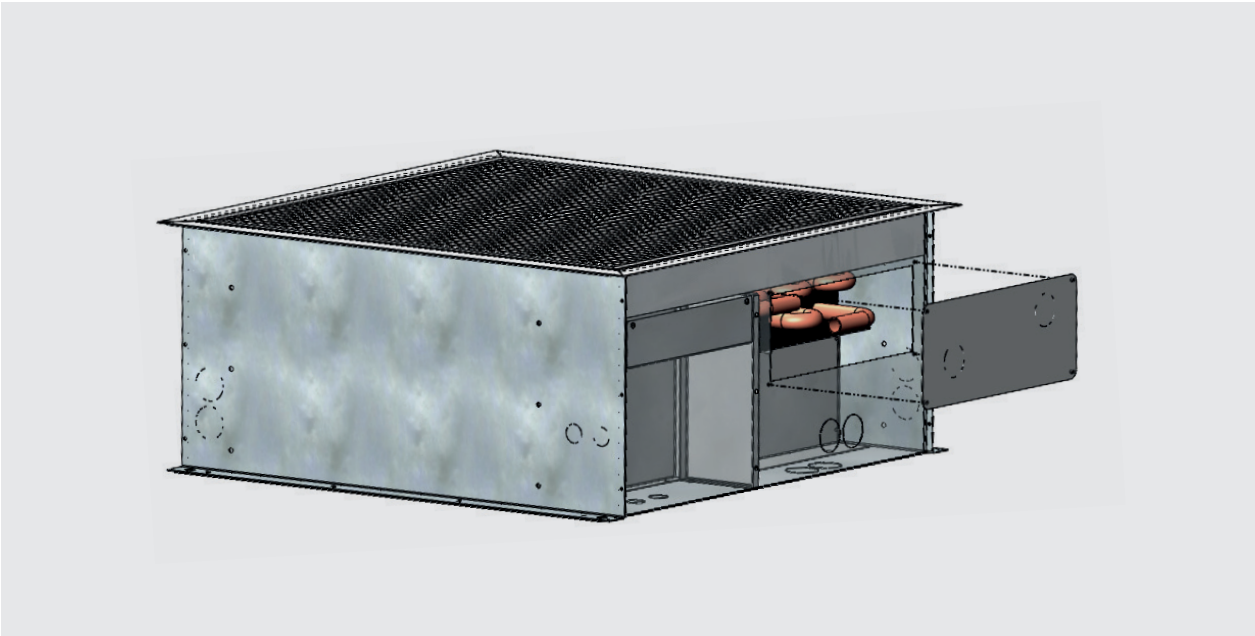

Figure 3. Pipe connection panel and knock-outs (Solo Plus unit shown)

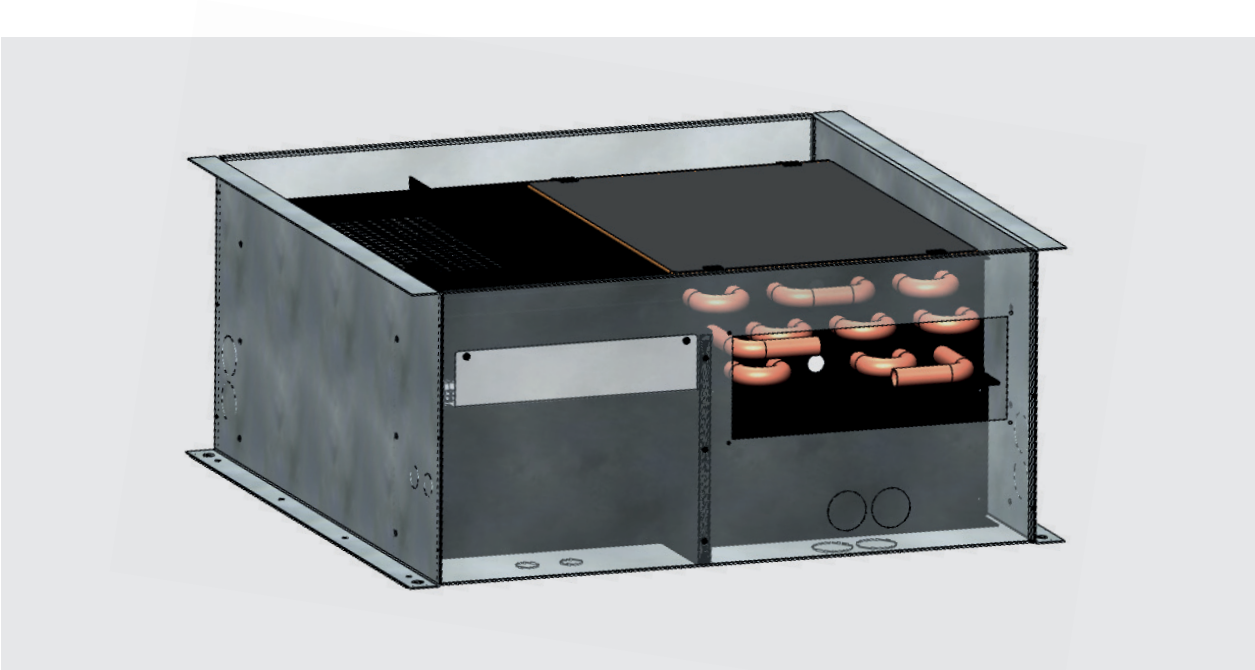

Figure 4. Coil and pipe connections (Solo Plus unit shown)

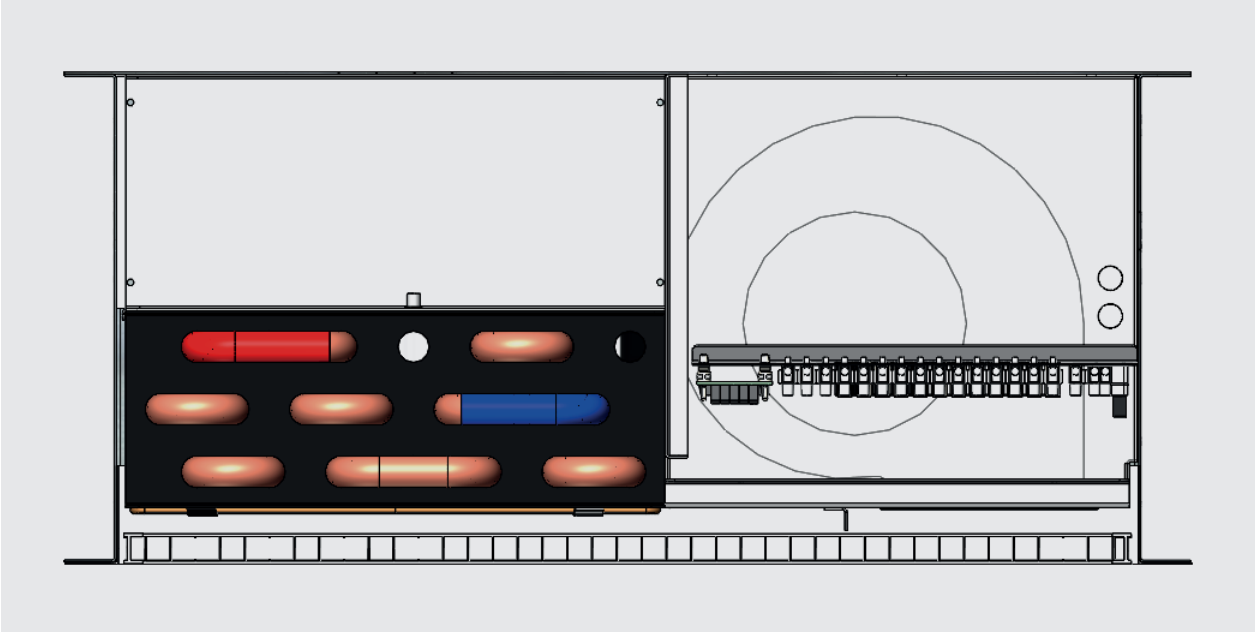

Figure 5. Flow connection at top, return connection closest to grille (Solo Plus unit shown)

4. Wiring

Units incorporate high efficiency EC motors directly coupled to the fan. Power to the units is from a standard 230V/1Ph/50Hz supply and transformation and rectification is provided by the motor. The table above gives details of the power draw.

All wiring should be undertaken by a certified electrician in line with the latest version of the wiring regulations. The unit should be isolated prior to working on it or opening the hinged grille. It is recommended that each unit is powered from a dedicated fused/switched spur. An earth connection must be provided as part of the power supply.

Electrical connections, both power and control, are made direct to a terminal block in the electrical housing inside the unit. Knock-outs are provided for cable entry or holes can be cut in other place ensuring that no internal components are damaged. All cable openings must have glands/grommets. See diagram below.

5. Control

A range of control options are available with the unit and a wiring diagram is provided with each. Controls for Tilevector Plus units will be remote and will consist of on/off, change speed or proportional thermostats along with on/off, change speed and summer/winter switches. If the wiring diagram is not available or lost then please contact SPC.

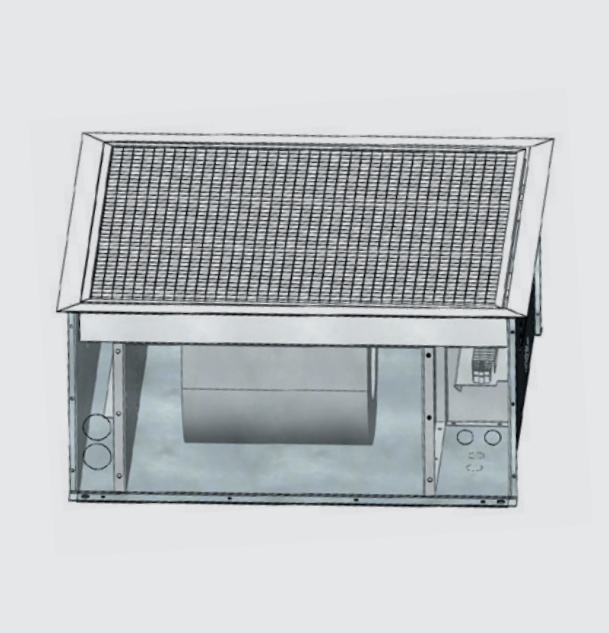

Figure 6. Terminal block and wiring knock-outs (Solo Plus unit shown)

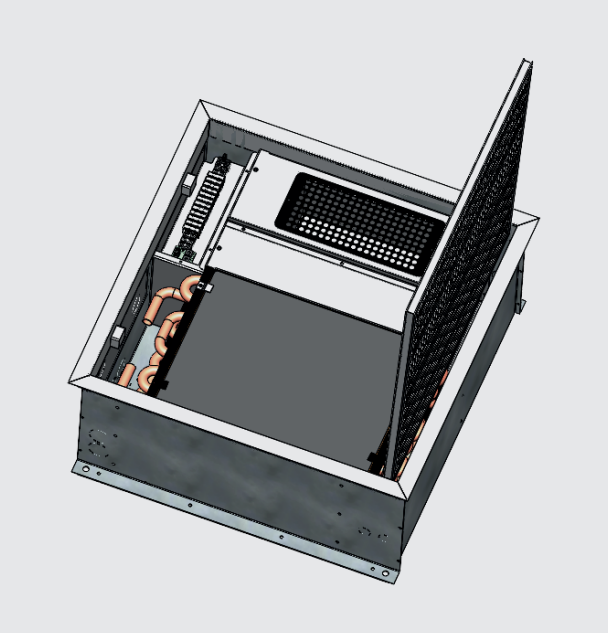

Figure 7. Terminal block position (Solo Plus unit shown)

6. Commissioning

Commissioning of TileVector Plus heaters requires the following:

- Check rotation of all fans
- Check leaving air temperature
- Check operation of any controls
- Check no excessive and/or unexpected noise

7. Maintenance

To ensure effective and safe operation of the unit it is imperative that the internal surfaces remain clean. In order to maintain the heater at maximum efficiency it is recommended, especially when mounted in dusty areas, that the unit is cleaned internally using a vacuum cleaner nozzle attachment and that this should be done at least once every 3 months depending on the environment. Alternatively, a dry cloth can be used but the unit must not be cleaned using water or spray. Under no circumstances should moisture be allowed in contact with the internal surfaces of the heater. Access to the inside of the unit can be achieved by hinging of the eggcrate grille. **Always ensure that the unit is electrically isolated prior to opening the grille for cleaning etc.** The external panels can be cleaned using a dry cloth or mild detergent but moisture must not be allowed to seep inside the casing.

If a filter is included in the unit then this can be removed from the unit prior to cleaning, dried and refitted. After removal of the filter the coil heat exchanger can be cleaned with a vacuum cleaner or compressed air. It is recommended that the filter (if fitted) is inspected on a regular basis initially to determine the regularity with which it should be cleaned; this will depend on the environment and the level of dust etc.

Fan bearings – the forward curved fan incorporates sealed for life bearing and no lubrication is required.

8. Fault finding

Below is a list of common faults and the steps required to resolve them.

Fault	Cause	Remedy
Fan not running	No power	Check electricity supply to unit
	Fuse blown	Check unit fuse and any circuit breakers
	Controls	Check controls are not preventing fan(s) from operating
	Damaged fan/motor	Replace faulty fan assembly
Low leaving air temperature	Controls	Check controls are not preventing fan from energising. Check controls are not preventing valves from opening in the pipework external to the unit.
	No/low water flow and/ or temperature	Check that there is a good flow of hot water reaching the unit and that there is not an excessive temperature drop between the flow and return pipes. High temperature drops indicate very low water flowrates. Check temperature of hot water flow to the unit.

9. Disposal

Units have a heat exchanger from copper tubes and aluminium fins. The units include fan assemblies from mixed materials and printed circuit boards which should be disposed of separately and in line with WEEE directives. It is not recommended that the units are disposed of with domestic waste but that the components are recycled as far as possible.

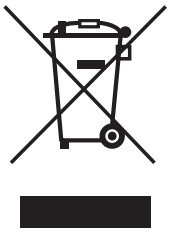

PART OF THE
CARVER
GROUP

SPC House
Evington Valley Road
Leicester
LE5 5LU

T: 0116 249 0044
E: spc@spc-hvac.co.uk
spc-hvac.co.uk