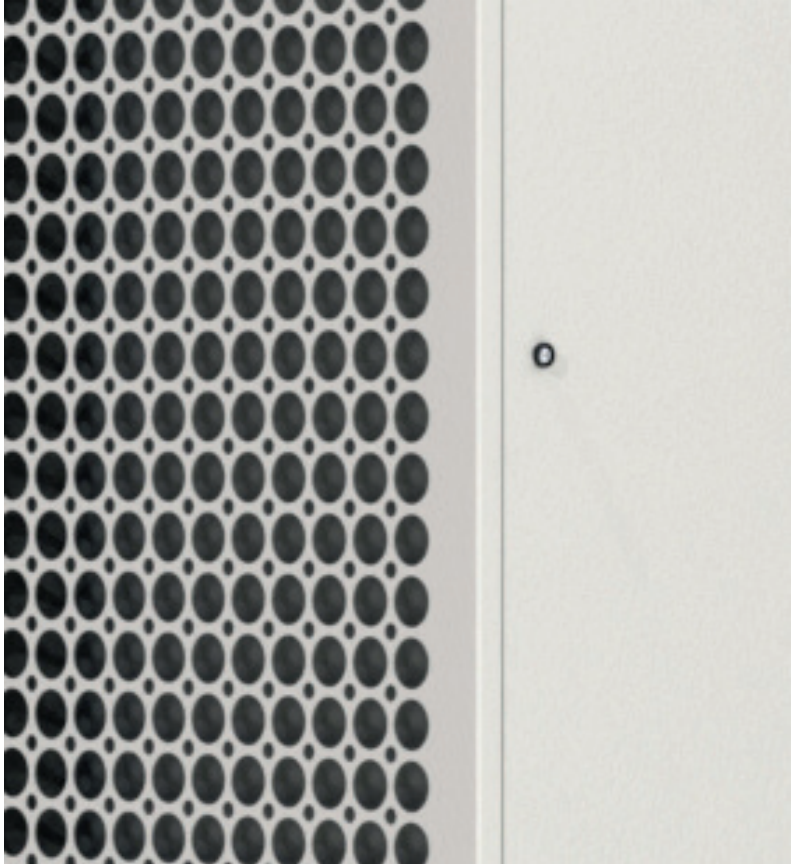

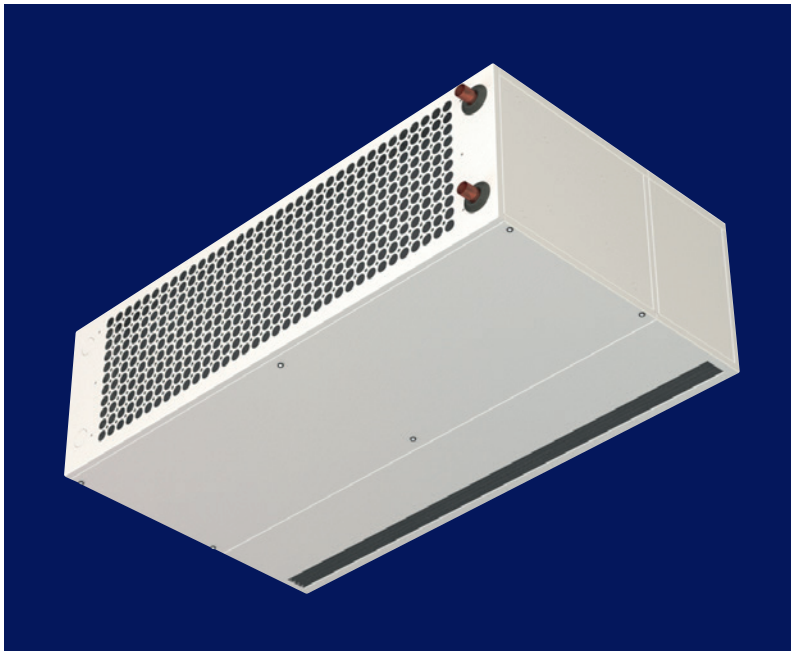

iFORCE
INDUSTRIAL
AIR CURTAIN

SPC

Contents

		Page
1	iForce Industrial Air Curtains	3
2	Dimensions	4
3	Performance Data	5
4	Mounting Height	6
5	Noise Data	7
6	Electrical Data	7
7	Configurations	8
	7.1 Horizontal Mounting	8
	7.2 Vertical Mounting	9
8	Accessories and Options	9
9	Controls	10
10	Specification	11

S & P Coil Products Limited reserves the right to amend specification without any notice, whilst pursuing a policy of continual improvements in performance and design

1 iForce Industrial Air Curtains

The SPC range of industrial air curtains are high powered air barriers designed for industrial or heavy commercial applications intended to blow a jet of air across an open doorway to help prevent loss of conditioned air and to heat any air which enters.

The units are designed to offer protection to doorways with heights of up to 6m and can be fitted either horizontally above the door or vertically along the sides of the door. Units are available in widths of 1.5, 2.0 and 2.5m. Horizontal units can be fitted side by side to provide coverage of doorways of any length. Vertical units can be fitted on either the left hand side, right hand side or both sides of the doorway and may be stacked.

Versions are available without heat exchangers (ambient units), with electric heating elements or with low pressure hot water coil heat exchangers.

The latter can be supplied as standard with a 2 row coil to suit conventional boiler temperatures or with an enhanced 3 row coil to suit lower water temperatures associated with condensing boilers or heat pumps.

The air curtains are equipped with a series of powerful forward curved blowers which generate a high momentum jet of warm or ambient air extending to the floor or across the door. The motors are EC type allowing complete control over the rotational speed of the blowers and corresponding control of the rate of airflow and momentum of the air jet. Higher velocity/ momentum jets suit higher mounting heights/door widths.

Casings are from heavy gauge, powder coated steel and the units can be supplied with a range of mounting and control options.

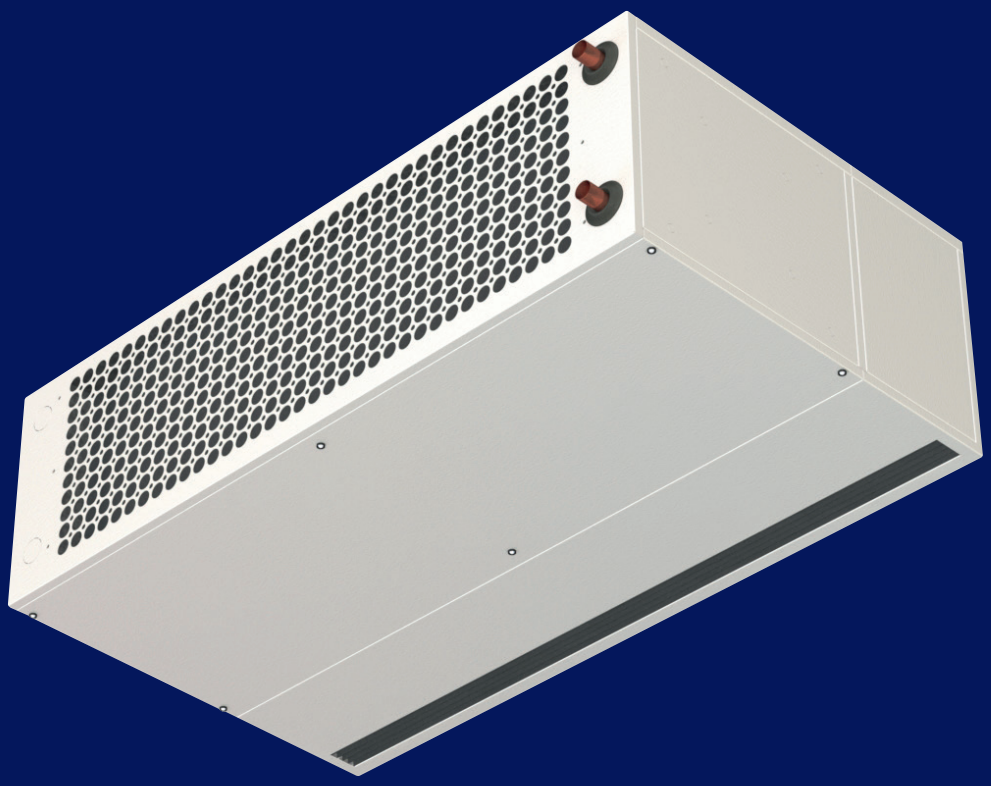

S & P Coil Products Limited reserves the right to amend specification without any notice, whilst pursuing a policy of continual improvements in performance and design

2 Dimensions

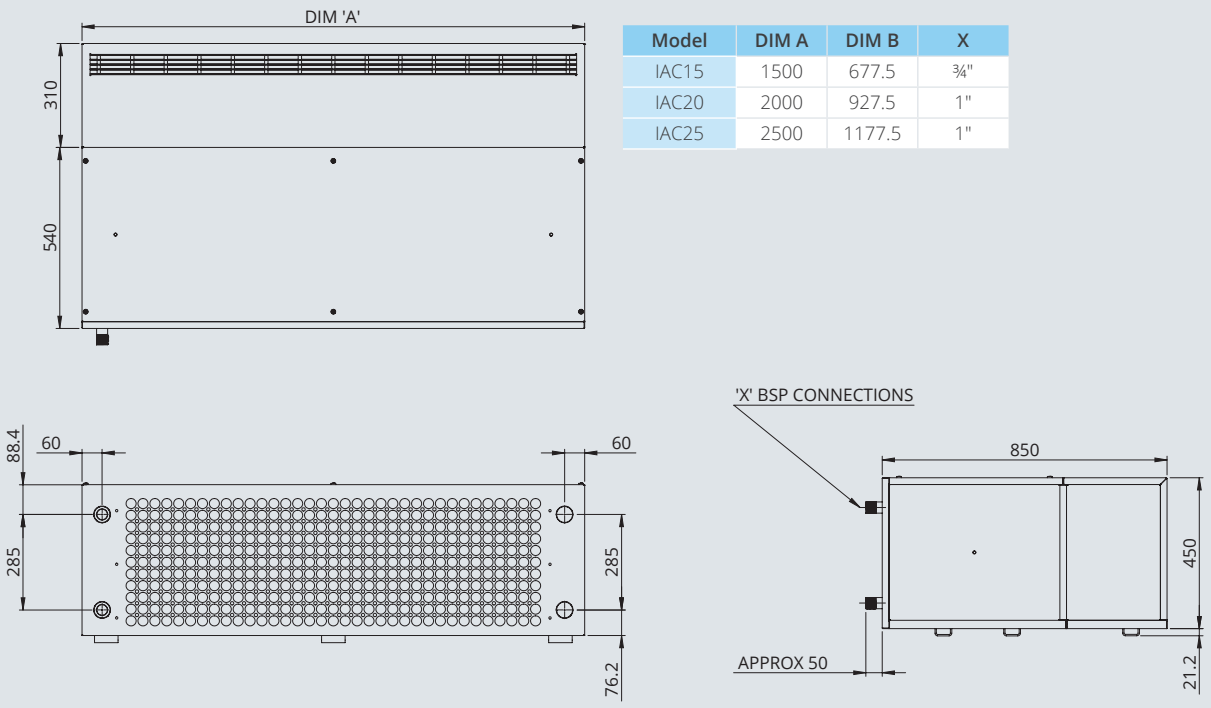

Model	DIM A	DIM B	X
IAC15	1500	677.5	¾"
IAC20	2000	927.5	1"
IAC25	2500	1177.5	1"

Figure 1. Major dimensions

Unit weights are approximately as given in the table below:

Unit size	IAC15	IAC20	IAC25
Approx. dry weight (kg)	125	155	200
Int. vol. 2 row coil (l)	3.2	4.4	6.0
Int. vol. 3 row coil (l)	4.7	6.4	8.6

Table 1. Unit weights/volumes

S & P Coil Products Limited reserves the right to amend specification without any notice, whilst pursuing a policy of continual improvements in performance and design

3 Performance Data

The most basic air curtain is the ambient unit which just blows a high velocity stream of untreated ambient air across the doorway. These units are ideal for instances where the area in proximity of the doorway does not need to be held above a minimum temperature. While they do not actively add heat to the space they do prevent the loss of warm inside air through the top of the doorway and reduce the ingress of cold air though the lower part of the door.

Size	IAC15			IAC20			IAC25		
Speed	Low	Medium	High	Low	Medium	High	Low	Medium	High
Airflow (m3/s)	1.10	1.62	2.01	1.34	1.89	2.15	2.01	2.84	3.22

Table 2. Performance of ambient air curtains.

If air curtains are required to treat the air so as to add heat to the area around the doorway to offset the door losses then either low pressure hot water can be utilised or direct electric heating can be selected. This is particularly important if occupants are working close to the open doorway.

If electric heating is selected then the heating is supplied via a series of nickel chromium resistance wires held in ceramic formers. The heaters are two stage to allow different rates of heating to the space and to conserve energy. All electric elements are 3 phase and rated at 400V and are complete with a series of safety cut-outs to prevent overheating and/or operation of the elements without the fans.

Size	IAC15		IAC20		IAC25	
Speed	Medium	High	Medium	High	Medium	High
Airflow (m3/s)	1.62	2.01	1.89	2.15	2.84	3.22
Output (kW)	12.0	18.0	18.0	24.0	24.0	36.0

Table 3. Details of airflows and heat outputs achievable using direct electric heating.

Units using low pressure hot water as the heating medium can be selected with heat exchangers designed to suit the flow/return temperatures of the water from/to the emitter. Conventional boilers will supply hot water at around 80°C and should be selected with the standard 2 row heat exchanger coil. When using low grade hot water generated by condensing boilers or heat pumps then units should be selected complete with the enhanced 3 row heat exchanger to compensate for the reduced temperatures.

Size	IAC15			IAC20			IAC25		
Speed	Low	Medium	High	Low	Medium	High	Low	Medium	High
Airflow (m3/s)	1.00	1.47	1.83	1.22	1.72	1.95	1.83	2.58	2.93
Output (kW)	25.7	31.0	34.0	33.4	39.4	41.8	46.9	55.3	58.5
Water flow (kg/s)	0.31	0.37	0.41	0.40	0.47	0.50	0.56	0.66	0.70
Water pressure drop (kPa)	7.2	10.1	12.0	6.3	8.6	9.6	7.5	10.2	11.3

Table 4a. Details of airflows and heat outputs using conventional hot water temperatures of 80/60°C. These are based on an air temperature of 18°C and the standard 2 row coil.

Size	IAC15			IAC20			IAC25		
Speed	Low	Medium	High	Low	Medium	High	Low	Medium	High
Airflow (m3/s)	1.00	1.47	1.83	1.22	1.72	1.95	1.83	2.58	2.93
Output (kW)	30.5	36.9	40.3	39.7	47.2	50.2	55.7	65.8	69.6
Water flow (kg/s)	0.66	0.80	0.87	0.86	1.02	1.09	1.21	1.43	1.51
Water pressure drop (kPa)	29.3	41.5	49.8	26.7	37.1	41.6	31.1	42.4	47.1

Table 4b. Details of airflows and heat outputs using conventional hot water temperatures of 82/71°C. These are based on an air temperature of 18°C and the standard 2 row coil.

S & P Coil Products Limited reserves the right to amend specification without any notice, whilst pursuing a policy of continual improvements in performance and design

Size	IAC15			IAC20			IAC25		
Speed	Low	Medium	High	Low	Medium	High	Low	Medium	High
Airflow (m3/s)	1.00	1.47	1.83	1.22	1.72	1.95	1.83	2.58	2.93
Output (kW)	29.6	35.7	39.5	38.4	45.8	49.0	54.1	63.9	67.9
Water flow (kg/s)	0.71	0.85	0.94	0.92	1.09	1.17	1.29	1.53	1.62
Water pressure drop (kPa)	32.9	46.5	55.9	30.0	41.9	47.7	35.3	48.0	53.7

Table 4c. Details of airflows and heat outputs using conventional hot water temperatures of 80/70°C. These are based on an air temperature of 18°C and the standard 2 row coil.

Size	IAC15			IAC20			IAC25		
Speed	Low	Medium	High	Low	Medium	High	Low	Medium	High
Airflow (m3/s)	0.95	1.40	1.74	1.16	1.63	1.85	1.74	2.45	2.79
Output (kW)	20.1	24.5	27.4	25.9	30.8	33.1	36.7	43.8	46.7
Water flow (kg/s)	0.24	0.29	0.33	0.31	0.37	0.39	0.44	0.52	0.56
Water pressure drop (kPa)	6.6	9.5	11.6	5.3	7.3	8.3	6.8	9.4	10.5

Table 5. Performance of units equipped with a 3 row heat exchanger. Performance is based on 18°C air temperature and 60/40°C hot water temperatures typical of a condensing boiler.

Size	IAC15			IAC20			IAC25		
Speed	Low	Medium	High	Low	Medium	High	Low	Medium	High
Airflow (m3/s)	0.95	1.40	1.74	1.16	1.63	1.85	1.74	2.45	2.79
Output (kW)	14.1	17.3	19.3	17.9	21.7	23.1	25.8	30.5	32.7
Water flow (kg/s)	0.34	0.41	0.46	0.43	0.52	0.55	0.62	0.73	0.78
Water pressure drop (kPa)	12.7	18.3	22.4	9.9	14.1	15.7	13.0	17.7	20.1

Table 6. Performance of units equipped with a 3 row heat exchanger. Performance is based on 18°C air temperature and 45/35°C hot water temperatures typical of an air source heat pump.

4 Mounting Height

Size	Speed		
Speed	Low	Medium	High
Minimum height (m)	3.0	3.5	4.0
Maximum height (m)	4.5	5.0	6.0

Table 7. Recommended mounting heights

The mounting heights shown above are for guidance only. Minimum mounting heights are intended to prevent excessive discomfort when walking below the curtain and to prevent excessive heat loss to the outside for a heated curtain. Maximum mounting heights are those recommended to provide an effective curtain to floor level; units can be mounted at higher levels but some ingress of cold air at floor level will be experienced despite the curtain still providing protection across most of its height.

If air curtains are mounted vertically then the mounting height becomes the effective range of the curtain from the side of the door. For particularly wide doors curtains may be mounted at both sides.

S & P Coil Products Limited reserves the right to amend specification without any notice, whilst pursuing a policy of continual improvements in performance and design

5 Noise Data

Industrial air curtains are intended to blow powerful jets of air over considerable distances. As such they handle high flowrates of air and the fans generate considerable levels of noise. The noise is high in the immediate vicinity of the curtain and falls away with distance from the door. If the area to be protected is noise sensitive then high powered curtains should not be used and physical barriers will need to be considered but as this is rarely the case in industrial applications curtains can just be selected based on door sizes and heating requirements. The various noise levels are a consequence of the rate at which air is moved to protect doors of varying sizes.

Size	IAC15			IAC20			IAC25		
Speed	Low	Medium	High	Low	Medium	High	Low	Medium	High
dBA	45	53	61	47	55	63	50	58	66

Table 8. Noise levels

The figures shown for noise levels in the table above are for indication/guidance only and represent what should be expected based on free field conditions and at a distance of 5m from the curtain. Actual noise levels will depend on the reverberant nature of the installation.

6 Electrical Data

Size	IAC15			IAC20			IAC25		
Speed	Low	Medium	High	Low	Medium	High	Low	Medium	High
Power draw (W)	250	750	1300	300	900	1500	450	1350	2250

Table 9. The above table is valid for ambient and low pressure hot water units. All 230V/1Ph/50Hz.

Size	IAC15		IAC20		IAC25	
Speed	Medium	High	Medium	High	Medium	High
Fan power draw (W)	750	1300	900	1500	1350	2250
Heating element power (kW)	12	18	18	24	24	36
Heating element current/phase (A)	18	26	26	35	35	53

Table 10. The above table is valid for electric heated units. All 400V/3Ph/50Hz.

S & P Coil Products Limited reserves the right to amend specification without any notice, whilst pursuing a policy of continual improvements in performance and design

7 Configurations

7.1 Horizontal Mounting

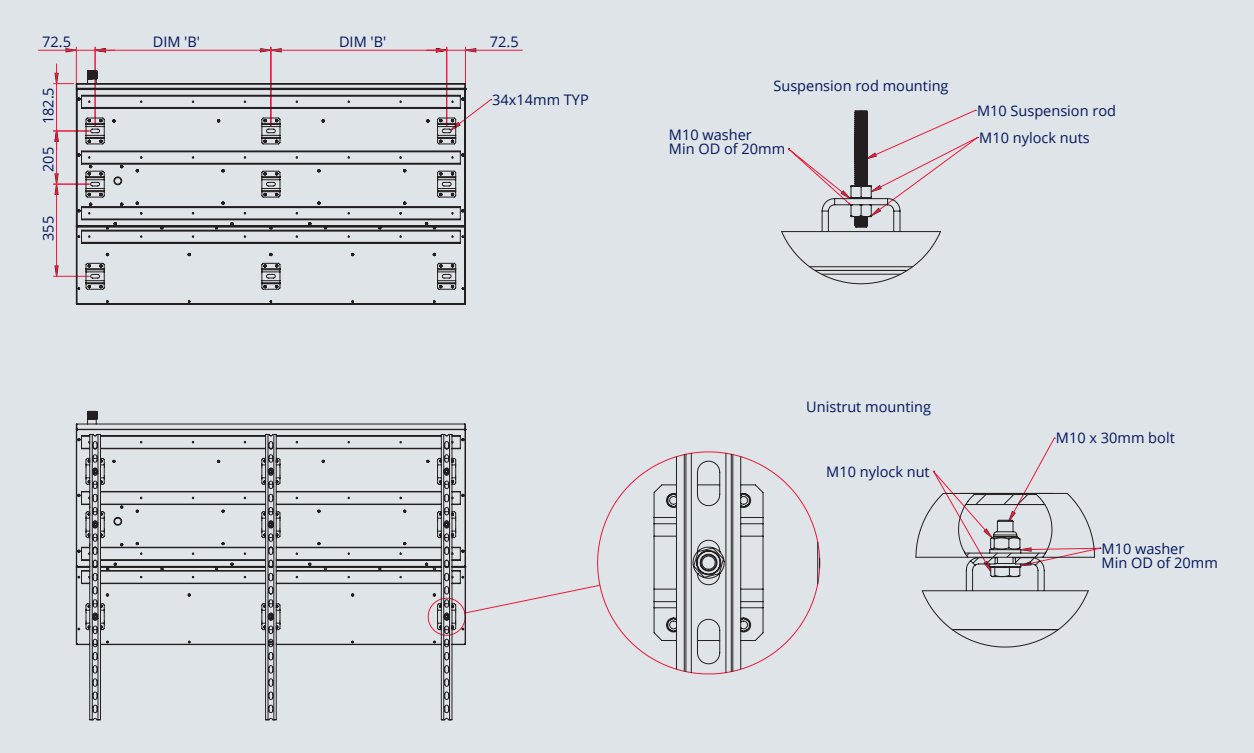

Figure 2. Horizontal units above door

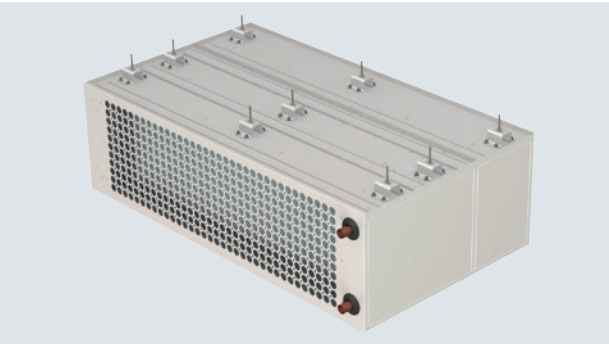

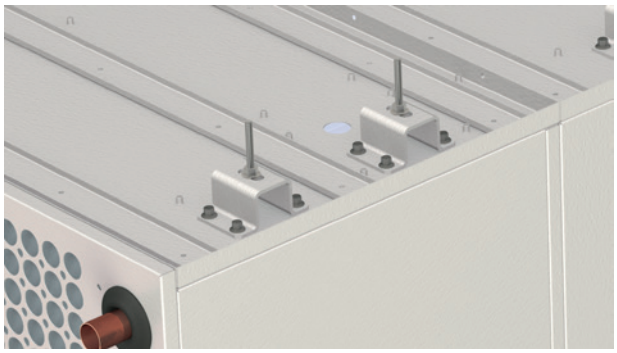

Horizontal Mounted via Suspension Rods

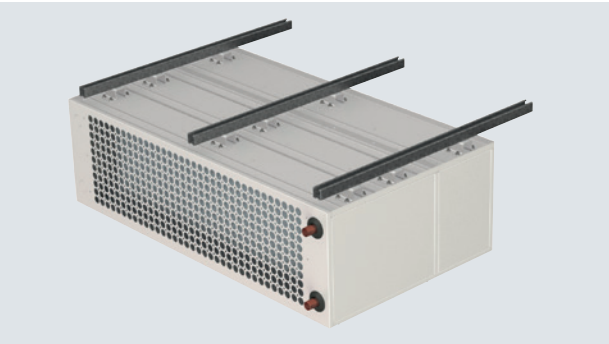

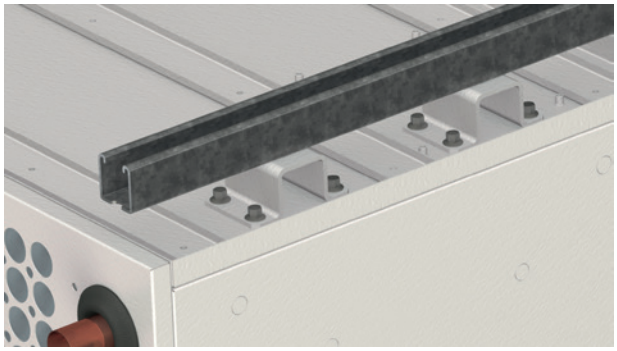

Horizontal Mounted via Unistruts

S & P Coil Products Limited reserves the right to amend specification without any notice, whilst pursuing a policy of continual improvements in performance and design

7.2 Vertical Mounting

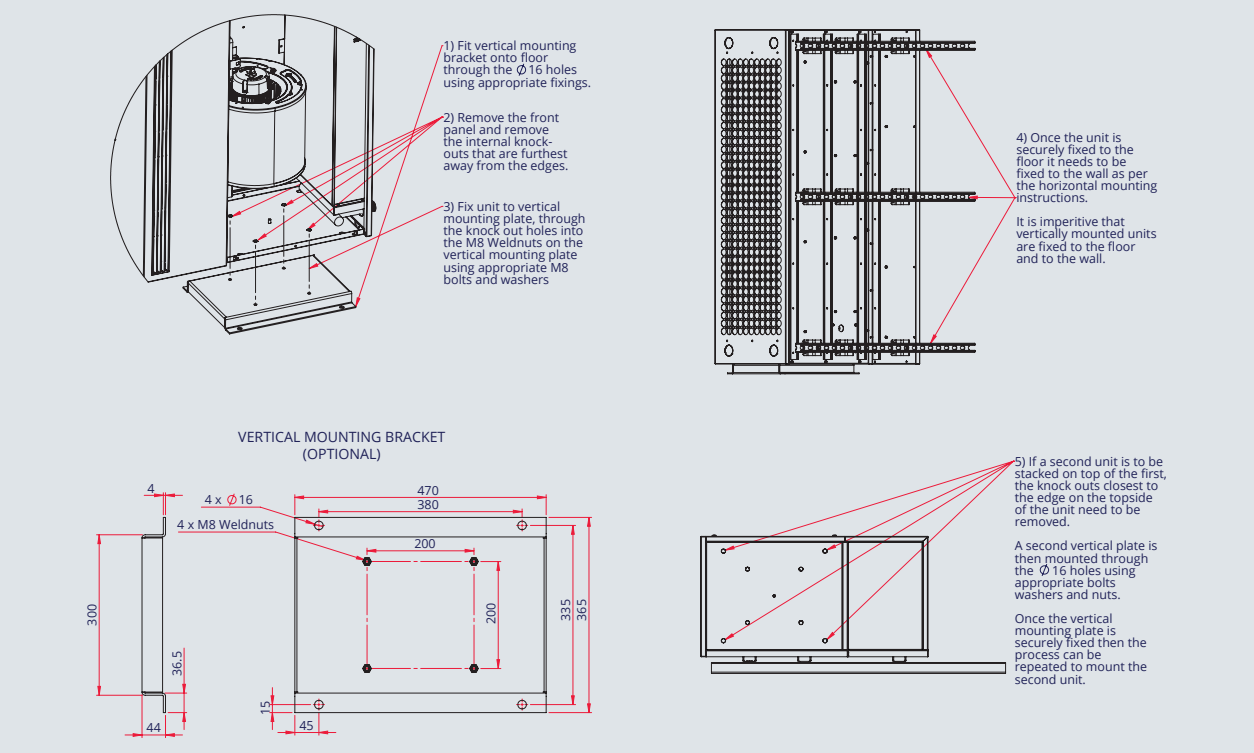

Figure 3. Vertical units at side of door

Vertical Mounted via Unistruts & Vertical Mounting Plate

8 Accessories and Options

A number of options/accessories and controls are available with the units. A list, which is not exhaustive, is given below but please contact SPC to discuss your particular requirements.

Casing/coil options:

- Various coils to suit LPHW temperatures
- Special paint finish (white standard)
- Various hanging brackets/solutions

9 Controls

Air curtains for industrial use can be controlled according to a number of regimes. The control components/ hardware required will depend upon this methodology and the options are listed below (note that control options shown can be combined if appropriate):

- **Manual control** – least sophisticated and does not benefit from energy saving possibilities but is simple to use and understand. In this incarnation the air curtain would be controlled by an on/ off rocker switch with the option for a change speed rocker switch. These switches would be wall-mounted, remote from the air curtain in an accessible position. They can be arranged to be fitted inside an IP rated box to suit harsh environments.

- **Automatic local door control** – in this incarnation the air curtain is controlled on/ off via a door contactor. The contactor can be mechanical, magnetic or other but its contacts will open/close in response to the opening/closing of the doorway that the curtain is protecting. A delay relay is included inside the air curtain to allow continued operation for a minimum period and to prevent the units switching on/off too rapidly in response to opening of the doorway.

S & P Coil Products Limited reserves the right to amend specification without any notice, whilst pursuing a policy of continual improvements in performance and design

- **Automatic local thermostatic control** – The SPC ECO DELTA controller is available for this purpose. It is appropriate to vary the heat output of an air curtain on the waterside rather than the airside as the latter will involve a reduction in the momentum of the jet protecting the doorway. The ECO DELTA kit includes a 2 port modulating valve/actuator and wall-mounted controller. As the temperature in the area close to the doorway approaches the setpoint the valve moves towards a closed position. This proportional control, via a 0-10V signal, provides energy saving benefits not available with manual or staged heat control.

- **BMS (central) control** – If a central control system is available and monitors the appropriate control conditions then it can be used to automatically control the air curtain(s) without the need for local controllers. The BMS can directly enable/disable the unit and can also send a modulating 0-10V signal to the waterside valve to control heat output on water heated units. If the option of using BACNET protocol is beneficial then the wall mounted controller available with the units can accept such signals and in turn control the position of water valves and switch the unit on/off. Local door contactor control can be combined with BMS control if the BMS is not capable of monitoring the door position.

- Master/slave arrangements should be chosen when multiple air curtains are used to protect a single doorway. The master unit is linked to the controls and sends a two-wire signal to the slave unit to control its operation.

10 Specification

Casing and inlet grille fabricated from heavy gauge mild steel with textured powder coated paint finish. Linear outlet grille from extruded aluminium finished in powder coat.

Motors are EC type in a quantity to suit the unit width. Motors have sealed for life bearings rated for continuous operation at temperatures up to 60°C. Each motor and control wiring is complete with in-built aluminium heat sink. Fans are forward curved centrifugal type with plastic impellers and galvanised steel scrolls. Motors/fans are continuously controllable via a 0-10V dc control signal.

The LPHW heat exchanger (coil) is constructed from copper tubes expanded into aluminium fins. Pipe connections terminate outside the unit in mild steel taper threaded BSP connections. All LPHW heat exchangers are pressure tested (air under water) to a pressure of 22 bar.

Electric heat exchangers comprise arrays of nickel/chromium resistance wires mounted in ceramic formers. The heaters are two stage and are complete with manual and automatic reset safety cut-outs.

S & P Coil Products Limited reserves the right to amend specification without any notice, whilst pursuing a policy of continual improvements in performance and design

PART OF THE
CARVER
GROUP

SPC House
Evington Valley Road
Leicester
LE5 5LU

T: 0116 249 0044
E: spc@spc-hvac.co.uk
spc-hvac.co.uk