Belgravia
Fan Convectors

SPC

SPC Belgravia Fan Convectors

Contents

		Page
1	Belgravia Supreme	3
	Dimensions	4
	Performance data	4
	Noise data	4
	Electrical data	4
	Belgravia Supreme Plus	5
2	Belgravia Supreme Configurations	6
3	Belgravia Classic	7
	Dimensions	8
	Performance data	8
	Noise data	8
	Electrical data	8
	Electric element heating	8
4	Belgravia Classic Configurations	10
5	Extended Casing Option	12
	Belgravia Supreme	12
	Belgravia Classic	13
6	Enhanced Coil Options	14
	Belgravia Supreme & Classic	14
7	Lowflow Coil Option	15
8	Active LST	16
9	Belgravia Tilevector	17
	Dimensions	18
	Performance data	18
	Electric element heating	18
	Noise data	18
	Electrical data	18
10	Belgravia Tilevector Plus	19
11	Modulo	20
12	Vision	22
13	Accessories and options	23

S & P Coil Products Limited reserves the right to amend specification without any notice, whilst pursuing a policy of continual improvements in performance and design

Belgravia Supreme

With the absence of any sharp corners and its ergonomically rounded design, the Belgravia Supreme is the ideal fan convector suited for environments where appearance and safety are paramount.

Through a variety of control options, power ratings and casing configurations, you can adapt the Belgravia Supreme to a wide range of applications.

Standard colour is white casing and grilles (RAL 9010) but units are also available as two tone grey with the top, bottom and grilles to RAL 9002 and the front and sides in RAL 7044 (alternatively black grilles). Special paint finishes are available to order.

S & P Coil Products Limited reserves the right to amend specification without any notice, whilst pursuing a policy of continual improvements in performance and design

Dimensions

See page 6 for further configurations

Dimensions				
Model	SPR 40	SPR 60	SPR 90	SPR 150
Length (mm)	800	1000	1300	1600
Height (mm)	735 (775mm)*			
Depth (mm)	235			
Maximum Weight (kg)	31	41	46	52
Extended case length (mm)	1000	1300	1600	-
Extended case weight (kg)	34.1	45.1	50.6	-

* Plus unit has increased height
Extended casing is not available on plus unit

Performance data

Performance at 80/70°C water, 18°C space												
Speed	High				Medium				Low			
Unit size	Airflow (l/s)	Output (kW)	Water flow rate (l/s)	Pressure Drop (kPa)	Airflow (l/s)	Output (kW)	Water flow rate (l/s)	Pressure Drop (kPa)	Airflow (l/s)	Output (kW)	Water flow rate (l/s)	Pressure Drop (kPa)
SPR40	140	5.7	0.14	0.9	112	5.0	0.12	0.7	89	4.3	0.10	0.5
SPR60	236	8.9	0.22	2.3	172	7.4	0.18	1.6	105	5.3	0.13	0.9
SPR90	317	11.7	0.29	4.4	231	9.6	0.24	3.2	120	6.2	0.15	1.5
SPR150	329	16.3	0.40	9.3	289	14.9	0.37	8.0	180	10.5	0.26	4.3

Noise data

Noise Data				
Fan setting		High	Medium	Low
Model	SPR 40	45	38	32
	SPR 60	46	41	35
	SPR 90	43	37	32
	SPR 150	45	44	39

NR levels are based on a room volume that would normally be heated by a single unit of each size shown
Reverberation time of the room is taken to be 0.4 seconds
The listener is assumed to be standing in the middle of the room
The unit is assumed to be wall mounted

Electrical data

230 V / 50 Hz Supply										
Fan setting		High			Medium			Low		
Performance		Airflow (l/s)	EC power draw (W)	EC SFP (W/l/s)	Airflow l/s	EC power draw W	EC SFP W/l/s	Airflow l/s	EC power draw W	EC SFP W/l/s
Model	SPR 40	140	27	0.19	112	16	0.14	89	11	0.12
	SPR 60	236	84	0.38	172	53	0.29	105	15	0.14
	SPR 90	317	73	0.23	231	34	0.15	120	18	0.15
	SPR 150	329	80	0.24	289	58	0.20	180	22	0.12

S & P Coil Products Limited reserves the right to amend specification without any notice, whilst pursuing a policy of continual improvements in performance and design

Belgravia Supreme Plus

The Belgravia Supreme Plus range is based on the range of Belgravia Supreme fan convectors and incorporates a fresh air inlet spigot and motorised damper allowing the unit to provide both space heating and ventilation.

See page 6 for styles and dimensions of the unit.

Contact SPC for more information

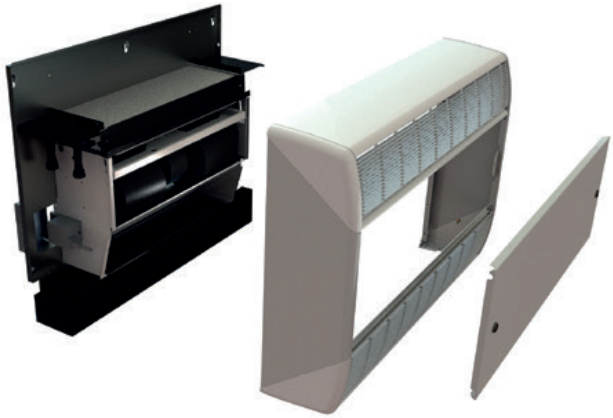

Enhanced coil and lowflow coil option

Our range of SPC Belgravia fan convectors now come with the option of having an enhanced coil, making them suitable for use with low temperature heating systems.

A lowflow coil option is also available for systems with low water flow rates.

For more information on these options, see page 14

Extended casing option

Belgravia Fan Convectors are available with extended casings to house valves within the unit. Valves can be specified by the user or supplied by SPC. These can be wired to close when room temperature exceeds the setpoint. Supplied valves and actuators are for on-site fitting and work with standard thermostats or the SPC Modulo v3 controller.

For more information on these options, see page 12

S & P Coil Products Limited reserves the right to amend specification without any notice, whilst pursuing a policy of continual improvements in performance and design

Configurations

Belgravia Supreme

Vertical styles

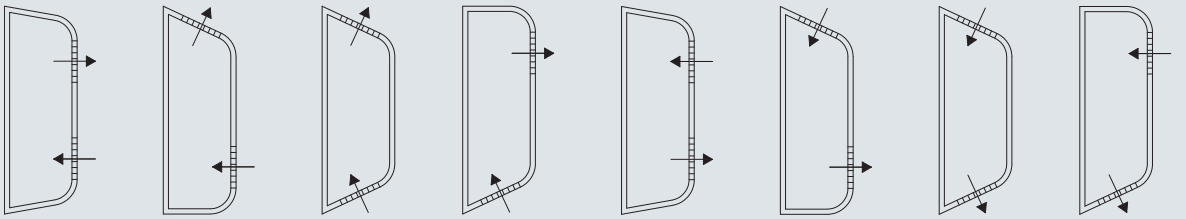

Horizontal styles

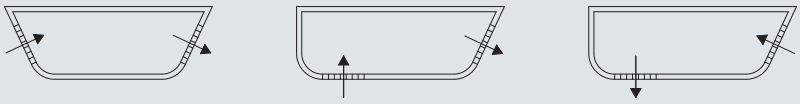

QS VS VS/RAF

Supreme Plus styles

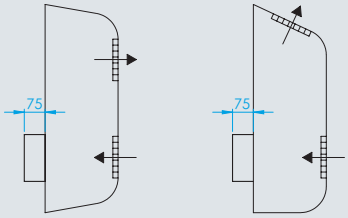

PLUS A PLUS B

Unit Size	40	60	90	150
Case Length (mm)	800	1000	1300	1600
Height (mm)	735 (775)*			
Depth (mm)	235			
Spigot Width	650	850	1150	1450
Spigot Height	155			

*Plus unit has increased height
Extended casing is not available on plus unit
Pipe connections ¾" BSP on all models (½" on lowflow heat exchangers)

Models not drawn to scale

S & P Coil Products Limited reserves the right to amend specification without any notice, whilst pursuing a policy of continual improvements in performance and design

Belgravia Classic

The Belgravia Classic fan convectors are so named because the traditional design has been used over many decades in thousands of schools nationwide. With clean lines and quiet running, the Belgravia Classic is ideal for sensitive environments.

Standard colour is white casing and grilles (RAL 9010) or white with black grilles. Special paint finishes are available to order.

S & P Coil Products Limited reserves the right to amend specification without any notice, whilst pursuing a policy of continual improvements in performance and design

Dimensions

See page 10 for further configurations

Dimensions				
Model	BEL 40	BEL 60	BEL 90	BEL 150
Case Length (mm)	700	900	1200	1500
Spigot length (mm)	640	840	1140	1440
Weight (kg)	32	36	45	57
Extended case length (mm)	900	1200	1500	-
Extended case spigot length (mm)	840	1140	1440	-
Extended case weight (kg)	35.2	39.6	49.5	-

Performance data

Performance at 80/70°C water, 18°C space												
Speed	High				Medium				Low			
Unit size	Airflow (l/s)	Output (kW)	Water flow rate (l/s)	Pressure Drop (kPa)	Airflow (l/s)	Output (kW)	Water flow rate (l/s)	Pressure Drop (kPa)	Airflow (l/s)	Output (kW)	Water flow rate (l/s)	Pressure Drop (kPa)
BEL40	140	5.7	0.14	0.9	112	5.0	0.12	0.7	89	4.3	0.10	0.5
BEL60	236	8.9	0.22	2.3	172	7.4	0.18	1.6	105	5.3	0.13	0.9
BEL90	317	11.7	0.29	4.4	231	9.6	0.24	3.2	120	6.2	0.15	1.5
BEL150	329	16.3	0.40	9.3	289	14.9	0.37	8.0	180	10.5	0.26	4.3

Noise data

Noise Data				
Fan setting		High	Medium	Low
Model	BEL 40	45	38	32
	BEL 60	46	41	35
	BEL 90	43	37	32
	BEL 150	45	44	39

NR levels are based on a room volume that would normally be heated by a single unit of each size shown
Reverberation time of the room is taken to be 0.4 seconds
The listener is assumed to be standing in the middle of the room
The unit is assumed to be wall mounted

Electrical data

230 V / 50 Hz Supply										
Fan setting		High			Medium			Low		
Performance		Airflow (l/s)	EC power draw (W)	EC SFP (W/l/s)	Airflow (l/s)	EC power draw (W)	EC SFP (W/l/s)	Airflow (l/s)	EC power draw (W)	EC SFP (W/l/s)
Model	BEL 40	140	27	0.19	112	16	0.14	89	11	0.12
	BEL 60	236	84	0.38	172	53	0.29	105	15	0.14
	BEL 90	317	73	0.23	231	34	0.15	120	18	0.15
	BEL 150	329	80	0.24	289	58	0.20	180	22	0.12

Electric element heating

Electric Unit				
Data		Airflow (l/s)	Output (kW)	Current per phase (A)
Model	BEL 40	112	3.75	6
	BEL 60	172	6.00	9
	BEL 90	231	9.00	13

All units suitable for 400V/50Hz/3Ph supply
Electric units only available as A style
On/off control by switching or remote thermostat or BMS

S & P Coil Products Limited reserves the right to amend specification without any notice, whilst pursuing a policy of continual improvements in performance and design

Enhanced coil and lowflow coil option

Our range of SPC Belgravia fan convectors now come with the option of having an enhanced coil, making them suitable for use with low temperature heating systems.

A lowflow coil option is also available for systems with low water flow rates.

For more information on these options, see page 14

Extended casing option

Belgravia Fan Convectors are available with extended casings to house on/off valves within the unit. Valves can be specified by the user or supplied by SPC. These can be wired to close when room temperature exceeds the setpoint. Supplied valves and actuators are for on-site fitting and work with standard thermostats or the SPC Modulo v3 controller.

For more information on these options, see page 12

S & P Coil Products Limited reserves the right to amend specification without any notice, whilst pursuing a policy of continual improvements in performance and design

Configurations

Belgravia Classic

Vertical styles

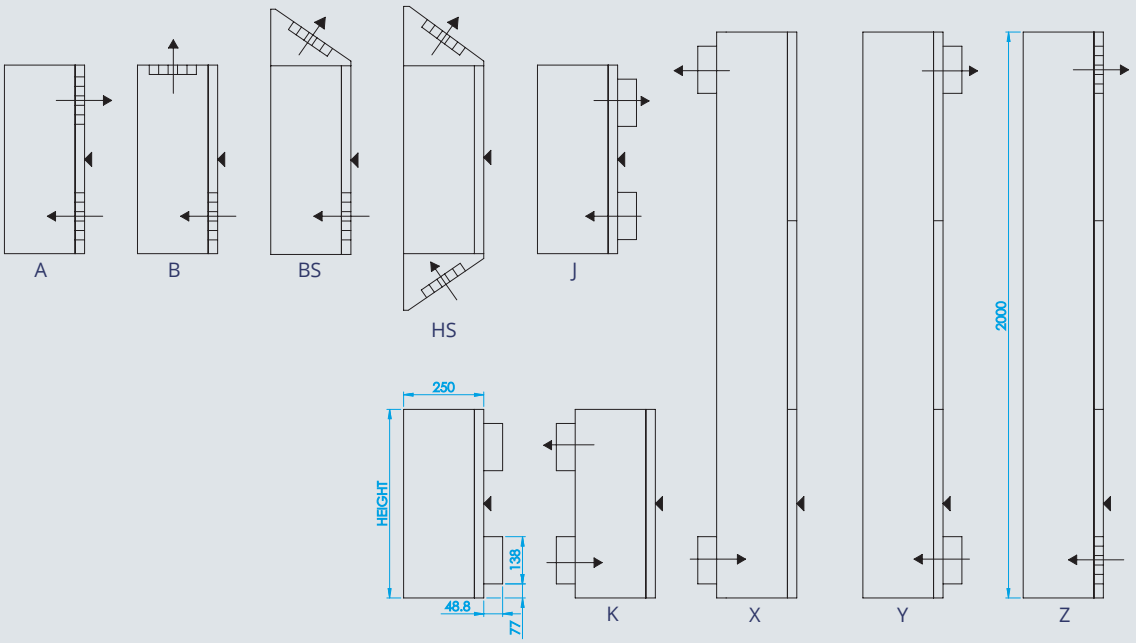

Horizontal styles

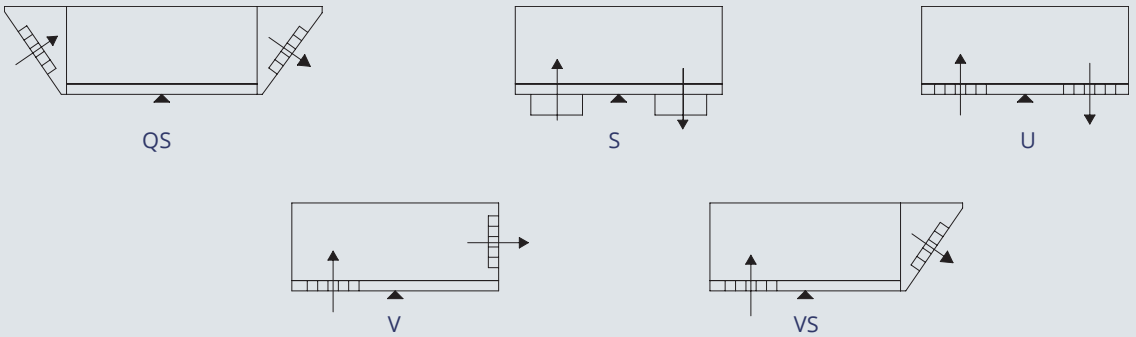

Model	BEL 40	BEL 60	BEL 90	BEL 150
Case Length (mm)	700	900	1200	1500
Spigot Width (mm)	540	740	1040	1340
Spigot Length (mm)	537.6	737.6	1037.6	1337.6
Extended case length (mm)	900	1200	1500	-
Extended case spigot length (mm)	840	1140	1440	-

Height:
A, B, J, K, S, U, V = 600mm
BS, VS = 725mm
HS, QS = 850mm
X, Y, Z = 2000mm

Most styles available with reversed air flow and/or inverted casing

Style x, y, z standard height at 2000mm. Special height available upon request

Pipe connections 3/4" BSP on all models (½" on lowflow heat exchangers)

Models not drawn to scale

S & P Coil Products Limited reserves the right to amend specification without any notice, whilst pursuing a policy of continual improvements in performance and design

Reversed air flow styles

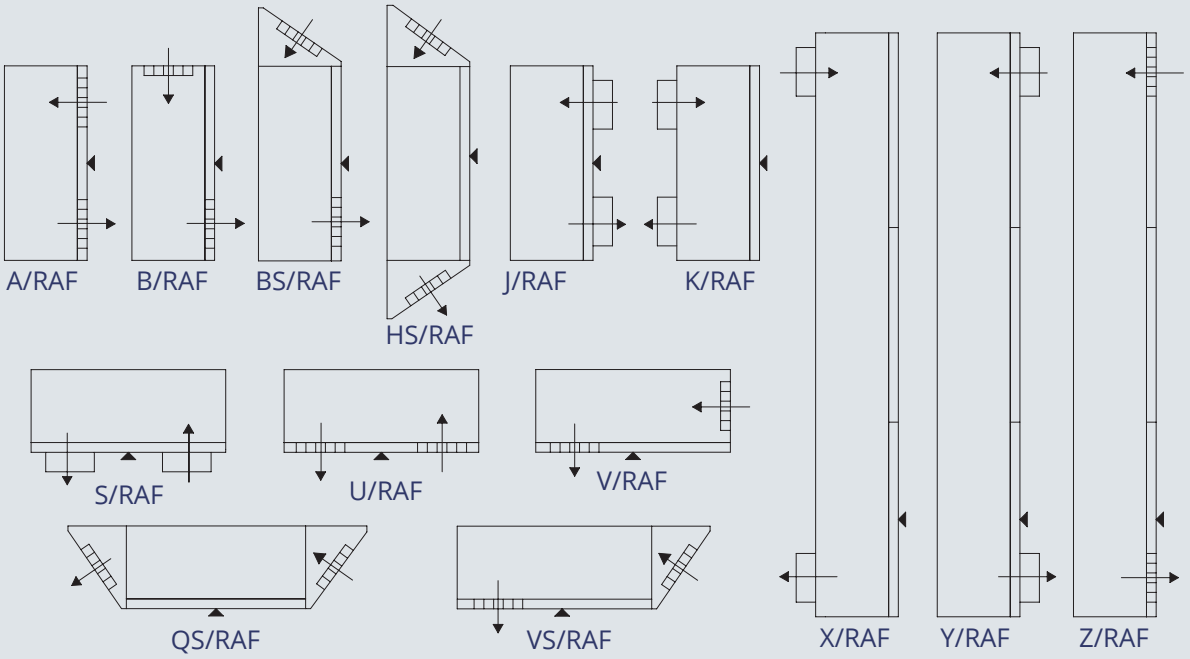

Inverted case styles

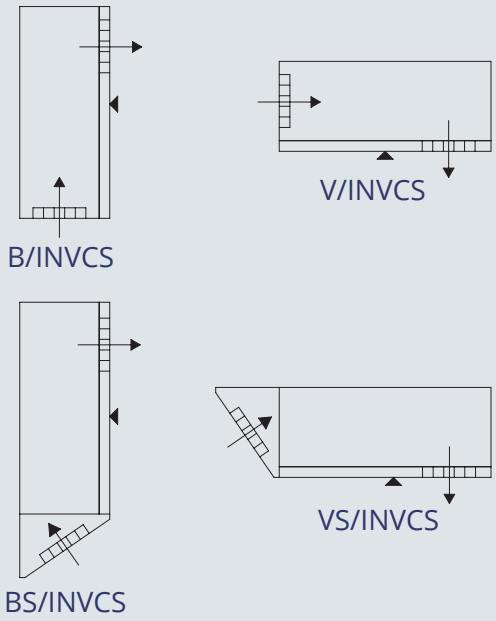

Inverted case + reversed air flow styles

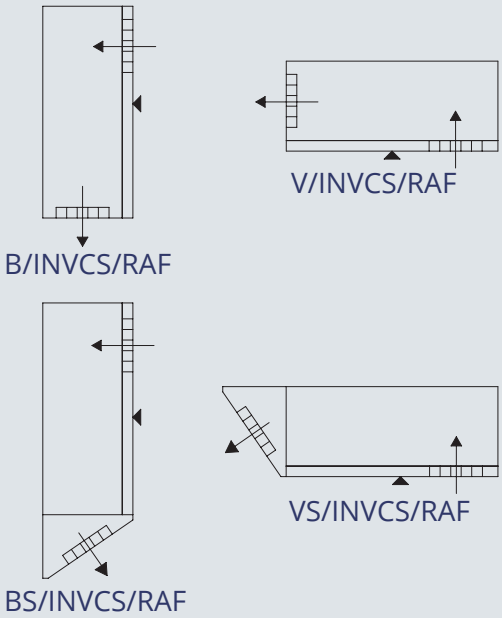

Extended Casing Option

Belgravia Fan Convectors are available with extended casings for occasions when it is important to incorporate valves within the extent of the unit.

An extended casing shares its width with the next size up in the standard range of units. Valves can be specified and supplied by the user or are available from SPC. SPC units can be wired such that waterside valves close whenever the sensed room air temperature exceeds setpoint.

If supplied by SPC, the valves and corresponding actuators are supplied loose for on-site fitting. The valves can be arranged to close in response to a standard on/off thermostat or can be integrated with the SPC Modulo v3 proportional controller.

Belgravia Supreme

Supreme A + Ext

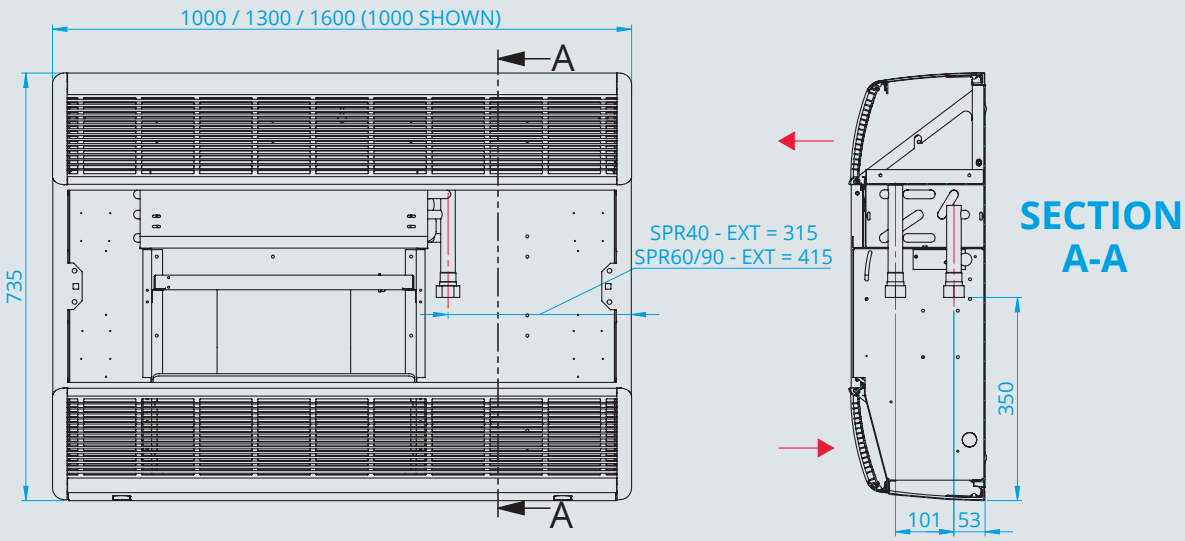

Unit Size	SPR40A	SPR60A	SPR90A
Case Length (mm)	1000	1300	1600
Height (mm)		735	
Depth (mm)		235	

Units shown with rh connections dimensions same with lh connections. Connections through knock-outs in bottom panel or through plinth. Plinth not shown

For styles A/RAF, BS, BS/RAF, BS/INVCS, BS/INVCS/RAF, HS, HS/RAF, QS, QS/RAF, VS and VS/RAF, please refer to our Belgravia Supreme Fan Convector IOM.

See **page 4** for Outputs, Noise Data and Electrical Data

Note: Extended casing is not available on plus unit

S & P Coil Products Limited reserves the right to amend specification without any notice, whilst pursuing a policy of continual improvements in performance and design

Belgravia Classic

Style A

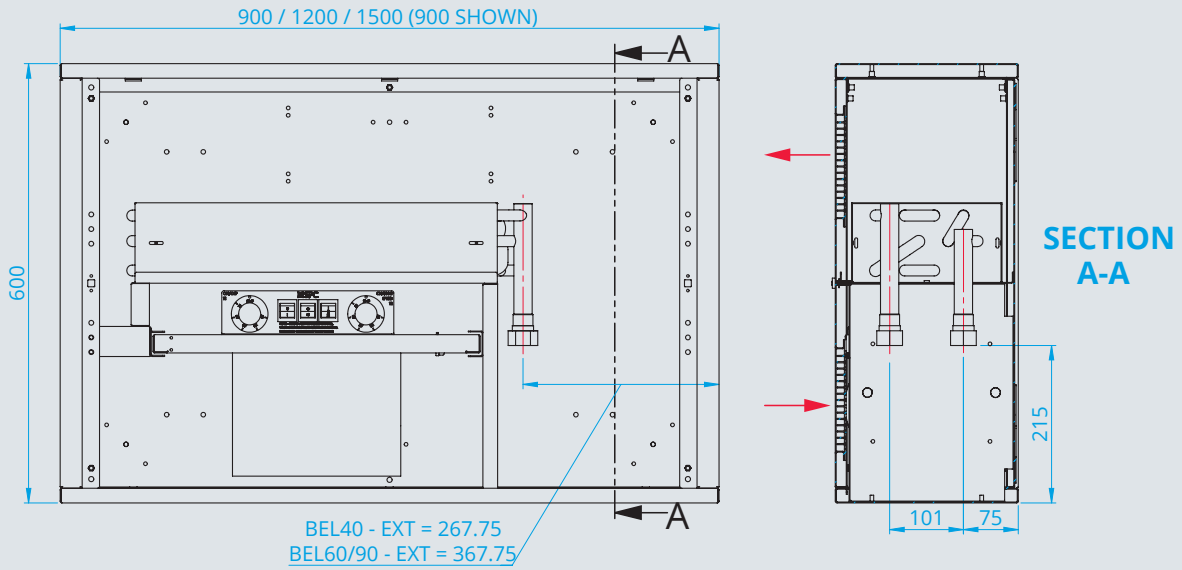

Unit Size	BEL40	BEL60	BEL90
Case Length (mm)	900	1200	1500
Height (mm)		600	
Depth (mm)		250	

For other styles, please refer to our Belgravia Classic Fan Convector IOM.

See **page 8** for Outputs, Noise Data and Electrical Data

S & P Coil Products Limited reserves the right to amend specification without any notice, whilst pursuing a policy of continual improvements in performance and design

Enhanced Coil Options

The tables below give details of the outputs obtainable from the range of Belgravia Supreme and Classic units equipped with enhanced low water temperature coils.

If water temperatures are low, as is increasingly the case when heat pumps or condensing boilers are used, an enhanced coil can be specified. Enhanced coils have increased surface area to optimise output at low hot water temperatures. If both low water temperatures and lowflow rates are used then the lowflow coil is the better solution.

Belgravia Supreme & Classic

Table 1. Performance at 50/40°C water, 18°C space

Speed	High				Medium				Low			
Unit size	Airflow (l/s)	Output (kW)	Water flow rate (l/s)	Pressure Drop (kPa)	Airflow (l/s)	Output (kW)	Water flow rate (l/s)	Pressure Drop (kPa)	Airflow (l/s)	Output (kW)	Water flow rate (l/s)	Pressure Drop (kPa)
BEL/SPR40*	126	3.3	0.08	4.2	101	2.8	0.07	3.1	80	2.3	0.06	2.3
BEL/SPR60	212	4.5	0.11	1.2	155	3.5	0.09	0.8	95	2.2	0.06	0.4
BEL/SPR90	285	6.3	0.15	2.6	208	5.1	0.12	1.8	108	3.0	0.07	0.7
BEL/SPR150	296	8.5	0.21	5.1	260	7.7	0.19	4.3	162	5.2	0.13	2.2

Table 2. Performance at 50/35°C water, 18°C space

Speed	High				Medium				Low			
Unit size	Airflow (l/s)	Output (kW)	Water flow rate (l/s)	Pressure Drop (kPa)	Airflow (l/s)	Output (kW)	Water flow rate (l/s)	Pressure Drop (kPa)	Airflow (l/s)	Output (kW)	Water flow rate (l/s)	Pressure Drop (kPa)
BEL/SPR40*	126	2.4	0.04	1.2	101	1.9	0.03	0.8	80	0.8	0.01	0.1
BEL/SPR60*	212	4.4	0.07	4.0	155	3.5	0.06	2.7	95	2.3	0.04	1.3
BEL/SPR90*	285	6.0	0.10	8.2	208	4.8	0.08	5.7	108	3.0	0.05	2.4
BEL/SPR150	296	7.2	0.12	1.9	260	6.5	0.11	1.6	162	4.3	0.07	0.8

Table 3. Performance at 45/35°C water, 18°C space

Speed	High				Medium				Low			
Unit size	Airflow (l/s)	Output (kW)	Water flow rate (l/s)	Pressure Drop (kPa)	Airflow (l/s)	Output (kW)	Water flow rate (l/s)	Pressure Drop (kPa)	Airflow (l/s)	Output (kW)	Water flow rate (l/s)	Pressure Drop (kPa)
BEL/SPR40*	126	2.5	0.06	2.7	101	2.1	0.05	2.0	80	1.7	0.04	1.4
BEL/SPR60*	212	4.1	0.10	7.4	155	3.3	0.08	5.1	95	2.3	0.06	2.6
BEL/SPR90	285	4.8	0.12	1.7	208	3.8	0.09	1.1	108	2.1	0.05	0.4
BEL/SPR150	296	6.8	0.17	3.5	260	6.1	0.15	3.0	162	4.1	0.10	1.5

Note. Selections marked * use the 'lowflow' coil with 1/2" pipe connectors, other selections are based on the 'enhanced' coil with 3/4" pipe connectors.

Enhanced or lowflow coils should be considered if water temperatures are below 60°C.

S & P Coil Products Limited reserves the right to amend specification without any notice, whilst pursuing a policy of continual improvements in performance and design

Lowflow Coil Option

It is increasingly common for fan convectors to be installed in systems which take advantage of low water flow rates to enhance efficiency and provide reduced return water temperature.

SPC manufacture their own coil heat exchangers and are able to offer the Supreme and Classic units with a special 'lowflow' coil to suit the above scenario. This special heat exchanger prevents the rapid fall off of capacity with flow rate.

Performance data

Performance at 60/45°C water, 18°C space												
Speed	High				Medium				Low			
Unit size	Airflow (l/s)	Output (kW)	Water flow rate (l/s)	Pressure Drop (kPa)	Airflow (l/s)	Output (kW)	Water flow rate (l/s)	Pressure Drop (kPa)	Airflow (l/s)	Output (kW)	Water flow rate (l/s)	Pressure Drop (kPa)
BEL/SPR40	126	4.1	0.07	3.0	101	3.5	0.06	2.3	80	2.9	0.05	1.7
BEL/SPR60	212	6.6	0.11	7.8	155	5.3	0.09	5.4	95	3.7	0.06	2.8
BEL/SPR90	285	8.7	0.14	15.3	208	7.0	0.11	10.5	108	4.3	0.07	4.5
BEL/SPR150	296	11.5	0.19	28.9	260	10.4	0.17	24.3	162	7.1	0.12	12.4

Lowflow coils should be considered if the return temperature is 15°C or more less than the flow temperature.

S & P Coil Products Limited reserves the right to amend specification without any notice, whilst pursuing a policy of continual improvements in performance and design

Active LST

SPC have developed a low surface temperature control system for use with its fan convector range. The new controller ensures that surface temperatures remain below the threshold above which there is a risk to vulnerable occupants. According to NHS guidelines this is taken as being equal to 43°C.

Unlike other fan-assisted low surface temperature units 'Active LST' control actively prevents surface temperature increase by monitoring the casing temperature at its hottest point. An independent valve then opens and closes in direct response to the casing temperature.

The closing of the valve reduces water flowrate and casing surface temperature to maintain it at or below the threshold value.

The chart shows temperatures measured on the outlet grille of an SPC fan convector utilising 'Active LST' control. The outlet grille and top panel are the hottest points on the casing.

Measured surface temperatures

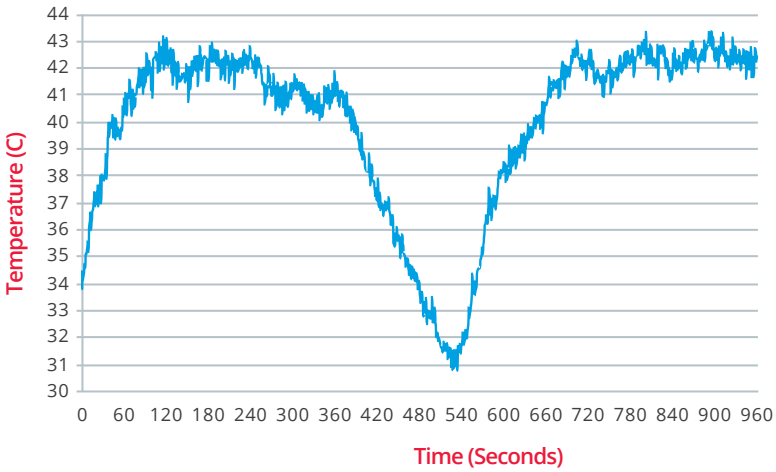

Output Table

Unit size	Nominal length (mm)	Airflow (litres/s)	Capacity (kW)
BEL/SPR40	700	112	3.1
BEL/SPR60	900	172	4.7
BEL/SPR90	1200	231	6.4
BEL/SPR150	1500	289	8.0

Based on water at 80/60°C and 20°C room air.

- Direct sensing of hottest temperature on casing
- Independent control valve modulates to set maximum threshold temperature at 43°C
- Available with a range of capacity control options
- Surface temperature and heating capacity separately controlled
- Ensures compliance with NHS guidelines
- Can be implemented on the full range of available sizes of SPC fan convector
- No additional pipework or wiring required; everything is pre-installed
- Available with rounded ends for enhanced safety
- Available on Classic and Supreme units for A and BS styles'
- LST valve sets terminate in 15mm copper tails

Contact SPC for further information.

S & P Coil Products Limited reserves the right to amend specification without any notice, whilst pursuing a policy of continual improvements in performance and design

Belgravia Tilevector

Powerful reliable fans are provided to draw in room air and distribute the conditioned air. The combination of air throw and rapid energy transfer brings immediate warmth to those below.

The Belgravia Tilevector range is suitable for installation into both T-Bar suspended ceiling grids (600mm x 600mm) and plasterboard ceilings. They can also be suspended from solid ceilings.

The body of the casing is in black; the room-facing grille is in white (RAL 9010).

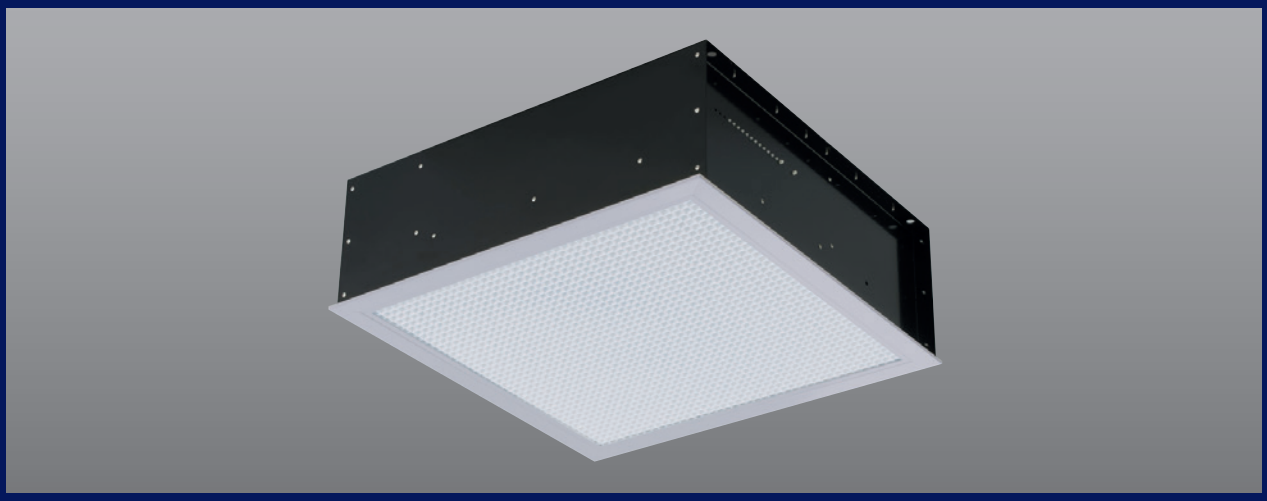

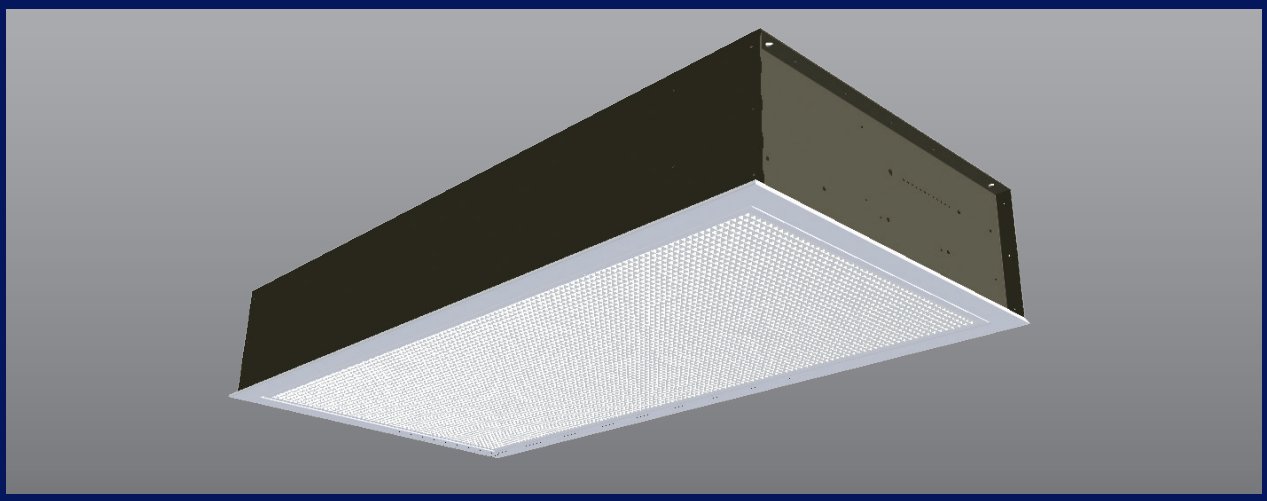

S & P Coil Products Limited reserves the right to amend specification without any notice, whilst pursuing a policy of continual improvements in performance and design

Dimensions

Dimensions		
Model	SOLO	DUO
Length (mm)	595	1195
Width (mm)	595	
Depth (mm)	210	
Maximum Weight (kg)	18	35

Performance data

Performance at 80/70°C water, 18°C space															
Speed	High					Medium					Low				
Unit Size	Airflow (l/s)	Output (kW)	Exit Air Temp (ºC)	Pressure Drop (kPa)	Water Flow Rate (l/s)	Airflow (l/s)	Output (kW)	Exit Air Temp (ºC)	Pressure Drop (kPa)	Water Flow Rate (l/s)	Airflow (l/s)	Output (kW)	Exit Air Temp (ºC)	Pressure Drop (kPa)	Water Flow Rate (l/s)
SOLO	95	3.7	49.9	6	0.09	85	3.4	51.3	5.3	0.08	70	3.1	53.9	4.3	0.07
DUO	190	8.6	55	44.2	0.21	170	8	56.5	39.1	0.19	140	7	59	31.3	0.17

Electric element heating

Performance Data			
Fan setting		Single speed	
Performance		Air Flow rate (l/s)	Output (kW)
Model	SOLO	121	3
	DUO	242	6

Noise data

Noise Data				
Fan setting		High	Medium	Low
Model	Solo	42	40	36
	Duo	44	42	38
	Solo Plus	40	38	34
	Duo Plus	42	40	36

NR levels are based on a room volume that would normally be heated by a single unit of each size shown
Reverberation time of the room is taken to be 0.4 seconds

Electrical data

230 V / 50 Hz Supply										
Fan setting		High			Medium			Low		
Performance		Airflow (l/s)	EC power draw (W)	EC SFP (W/l/s)	Airflow (l/s)	EC power draw (W)	EC SFP (W/l/s)	Airflow (l/s)	EC power draw (W)	EC SFP (W/l/s)
Model	Solo	95	18	0.19	85	14	0.16	70	12	0.17
	Duo	190	36	0.19	170	28	0.16	140	24	0.17
	Solo Plus	152	30	0.20	130	20	0.15	110	15	0.14
	Duo Plus	304	60	0.20	260	40	0.15	220	30	0.14

Dimensions and weights are given including unit cases and grilles
Coil supplied with 15mm connections on flow and return
Motors are high efficiency EC type
Grilles are hinged, egg-crate style core, all aluminium construction with powder coats or satin-silver finish

S & P Coil Products Limited reserves the right to amend specification without any notice,
whilst pursuing a policy of continual improvements in performance and design

Belgravia Tilevector Plus

Fan Convector units for low water temperature applications

The conventional Tilevectors are intended to fit within a suspended T bar ceiling grid. They are designed for optimum operation against traditional hot water temperatures generated by conventional boilers.

The Tilevector Plus unit has been developed as an alternative unit with enhanced airflow and heat exchanger to optimise operation against the increasingly lower temperature hot water available from heat pumps and condensing boilers.

The tables below give details of the outputs obtainable form the Tilevector Plus unit supplied with various low grade hot water temperatures.

The Tilevector Plus is available as both a Solo and Duo unit. Overall dimensions of the Solo unit are 595mmx595mmx260mm and for the Duo unit 1195mmx595mmx260mm. Weight of the Solo is 20kg and the Duo 35kg. Connections are 15mm copper on flow and return.

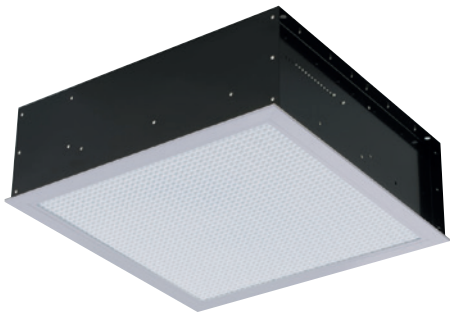

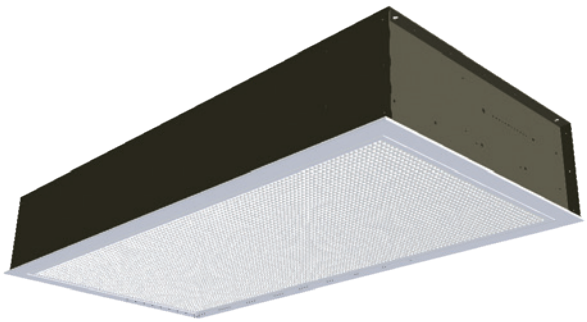

Unit size	Solo Plus			Duo Plus		
Speed	Low	Medium	High	Low	Medium	High
Output (kW)	2.7	3.2	3.5	5.8	7.1	7.8
Water flow (l/s)	0.06	0.08	0.08	0.14	0.17	0.19
Water PD (kPa)	9.4	13.1	15.4	9.4	13.7	15.8

Table 1. Performance at 50/40°C water, 18°C entering air

Unit size	Solo Plus			Duo Plus		
Speed	Low	Medium	High	Low	Medium	High
Output (kW)	2.1	2.6	2.8	4.7	5.7	6.3
Water flow (l/s)	0.05	0.06	0.07	0.11	0.14	0.15
Water PD (kPa)	6.5	8.9	10.6	6.6	9.2	11.0

Table 2. Performance at 45/35°C water, 18°C entering air

Unit size	Solo Plus			Duo Plus		
Speed	Low	Medium	High	Low	Medium	High
Output (kW)	2.3	2.8	3.0	5.2	6.2	6.8
Water flow (l/s)	0.04	0.05	0.05	0.08	0.10	0.11
Water PD (kPa)	3.5	4.9	5.8	3.7	5.2	6.1

Table 3. Performance at 50/35°C water, 18°C entering air

S & P Coil Products Limited reserves the right to amend specification without any notice, whilst pursuing a policy of continual improvements in performance and design

SPC Modulo v3

Our new proportional controller for fan-assisted heaters

Taking advantage of advances in design of electric motors, SPC Modulo v3, SPC's new proportional controller, is designed especially for incorporation into systems using airside control via 0 to 10V analogue signals. The SPC range of heating units utilise EC/DC fans and in conjunction with the new controller will provide enhanced comfort and energy efficiency.

Simplicity of use is key to the SPC Modulo v3. The thermostat is energised when the touch area in the top right is pressed and setpoint adjusted by the touch areas in the bottom left and right of the controller – no other settings are required. The controller will then automatically control the rotational speed of the fan depending on the difference between sensed and setpoint temperature.

A transparent coverbox is available with lockable cover if access to the thermostat needs to be restricted.

The units can be supplied with a relay box with volt free contact to provide on/off control of a water valve.

Key Features

- Energy saving via proportional speed control
- Enhanced comfort via precise thermostatic control
- Easy to use interface via touch area on fascia
- Can be supplied with ventilated, lockable, transparent cover for tamperproof applications.
- Volt free contact for valve control available as an option

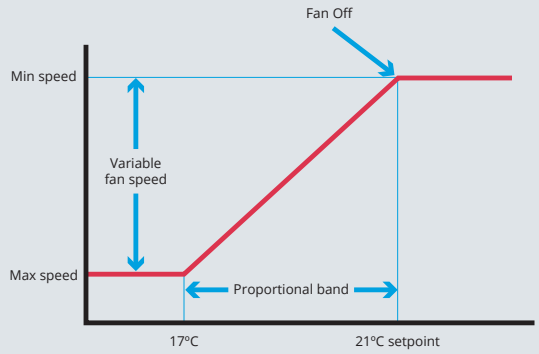

The chart shows how the controller varies the speed of the fan in response to the difference between the actual temperature and the setpoint temperature. Within the proportional band the fan speed is continuously varied to precisely match heat output to the required load.

S & P Coil Products Limited reserves the right to amend specification without any notice, whilst pursuing a policy of continual improvements in performance and design

Case Options for Modulo Controllers

We offer two types of cases for our SPC Modulo controller, providing flexibility to suit different installation environments. Each case is designed for specific applications, depending on the level of protection required.

Both options are shown below to help you choose the right solution for your project:

- **Standard square case** – A simple, ventilated cover offering basic protection for general installations.
- **Curved tamperproof case** – Ideal for tamperproof applications, this ventilated, transparent cover includes a lockable feature to prevent unauthorised access to the controller.

Modulo case options	
Square tamperproof case (Standard)	400/408
Curved tamperproof case	400/362

Standard square case

Curved tamperproof case

S & P Coil Products Limited reserves the right to amend specification without any notice, whilst pursuing a policy of continual improvements in performance and design

SPC Vision Controller

The SPC Vision Controller is a high end surface mounted control device, designed specifically for use with the range of SPC Fan Convectors fitted with EC motors.

The controller is surface mounted in a representative position within the conditioned room and incorporates a sophisticated LCD and intuitive push button control. The user sets the required room temperature using the up and down buttons and controls the fan speed between low, medium and high using the fan speed button. Fan speeds are preset via a 0-10V signal generated directly by the controller.

The controller directly sets the rotational speed of the fan via a control signal to the motor. There are also terminals available on the controller for operation of a 230V on/off water valve to stop the flow of hot water to the Fan Convector unit when the room setpoint temperature is reached.

An additional set of volt free contacts are available for remote enable/disable operation.

Multiple units in a single room can be controlled via a single controller. Contact SPC to discuss your requirements.

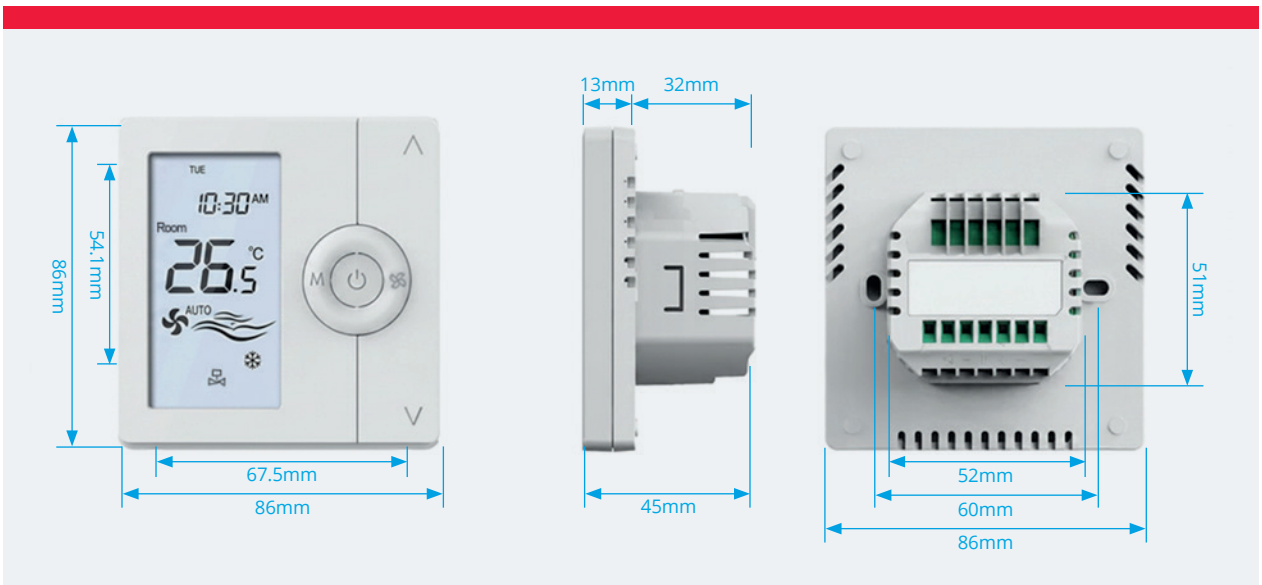

S & P Coil Products Limited reserves the right to amend specification without any notice, whilst pursuing a policy of continual improvements in performance and design

Accessories and options

Accessories					
	Control	Function	Classic	Supreme	Tilevector
THERMOSTATS	LTC†	Low water temperature fan cut-out	✓	✓	✓
	ALTC†	Adjustable low water temperature fan cut-out	✓	✓	✓
	T1*	In-built on-off control	✓	✓	
	T2*	In-built change speed control	✓	✓	
	RT1	Remote mounted on-off control	✓	✓	✓
	RT2	Remote mounted change speed control	✓	✓	✓
	TRT1	Tamper-proof on-off stat	✓	✓	✓
	TRT2	Tamper proof change speed control	✓	✓	✓
	MODULO	Proportional touchscreen controller	✓	✓	✓
	VISION	Digital Thermostat Controller	✓	✓	✓
SWITCHES	RS1	On-off rocker switch	✓	✓	✓
	RS2	Summer-winter switch	✓	✓	✓
	RS3	Three speed rocker switch	✓	✓	✓
	RS12	Combined on-off / summer-winter rocker switch	✓	✓	✓
	RS13	Combined on-off / change speed rocker switch	✓	✓	✓
	RS23	Combined summer-winter / change speed rocker switch	✓	✓	✓
	RS123	Combined on-off summer-winter & change speed rocker switch	✓	✓	✓
BMS	BMS1	Relay for remote enable/disable signal	✓	✓	✓
	BMS2	On/off and speed control via remote 0-10V signal from BMS	✓	✓	✓

*Not available on RAF or INVS/RAF units

† LTC is a fixed temperature thermal switch which enables the fan on a temperature rise (>35°C) and disables it on a temperature fall (<25°C). It is suitable for use with return water temperatures of 40°C and above and is fitted directly to the heat exchanger.

† An ALTC is an adjustable version (30 to 90°C) which is fitted to the flow pipe, not the heat exchanger and is suitable for use with flow temperatures of 40°C and above. Note that LTC/ALTC are not suitable for use at very low hot water temperatures and are not compatible with weather compensated systems regularly found on heat pumps.

Please see the next page for more accessories and options

S & P Coil Products Limited reserves the right to amend specification without any notice, whilst pursuing a policy of continual improvements in performance and design

Accessories					
	Control	Function	Classic	Supreme	Tilevector
ELECTRICAL CONNECTIONS	FSB	Fuse spur box	✓	✓	✓
	CCB	Customer connection box	✓	✓	✓
AIR SIDE OPTIONS	EAV	Extended air vent	✓		
	RAF	Reverse air flow	✓	✓	
	AF1	Air filter fitted between fan deck and coil	✓		✓
	AF2	Air filter fitted behind the inlet grille	✓		
	AF3	Air filter covering the inlet grille fitted to the motor plate		✓	
	POD†	Power operated damper		✓	
CASE OPTIONS & ACCESSORIES	SPF	Special paint finish	✓	✓	
	P	Plinth	✓	✓	
	LAP	Lockable access panel	✓	✓	
	TAP	Tamper proof access panel	✓	✓	
	EXTC	Extended casing	✓	✓	
	LGA	Loose grille assembly	✓		
	SWF	Special white finish	✓		
	BOX IF	Metal flush mounting box for single rocker switch	✓	✓	✓
	BOX IS	White plastic surface mounting box for single rocker switches	✓	✓	✓
	BOX 2F	Metal flush mounting box for combined rocker switches	✓	✓	✓
	BOX S2	White plastic surface mounting box for combined rocker switches	✓	✓	✓
	INVCS	Inverted casing	✓	✓	
	WM	Wall mounted stiffeners	✓	✓	
LOW SURFACE TEMPERATURE	LST	Low surface temperature unit	✓	✓	
COIL CONNECTIONS	ISV	Isolating valves for flow and return pipes (Not available on Tilevector Plus)			✓
	2PV	On/off valve for waterside controls (extended case required for internal valve fitting)	✓	✓	
	M2PV*	Modulo 2 port value plus relay box (extended case required for internal valve fitting)	✓	✓	✓
	V2PV	Vision 2-port on/off valve for waterside controls	✓	✓	✓

* Tilevector – Valve needs to be fitted outside the unit
† POD is only available on Belgravia Supreme Plus models

S & P Coil Products Limited reserves the right to amend specification without any notice, whilst pursuing a policy of continual improvements in performance and design

S & P Coil Products Limited reserves the right to amend specification without any notice,
whilst pursuing a policy of continual improvements in performance and design

S & P Coil Products Limited reserves the right to amend specification without any notice,
whilst pursuing a policy of continual improvements in performance and design

S & P Coil Products Limited reserves the right to amend specification without any notice,
whilst pursuing a policy of continual improvements in performance and design

SPC
Fan Convector projects

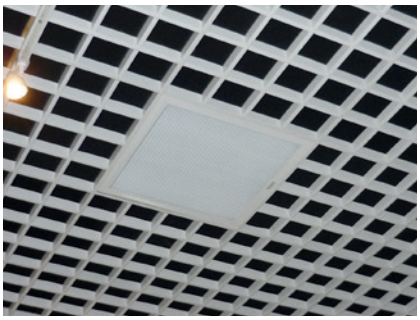

PART OF THE CARVER GROUP

SPC House
Evington Valley Road
Leicester
LE5 5LU

T: 0116 249 0044
E: spc@spc-hvac.co.uk
spc-hvac.co.uk