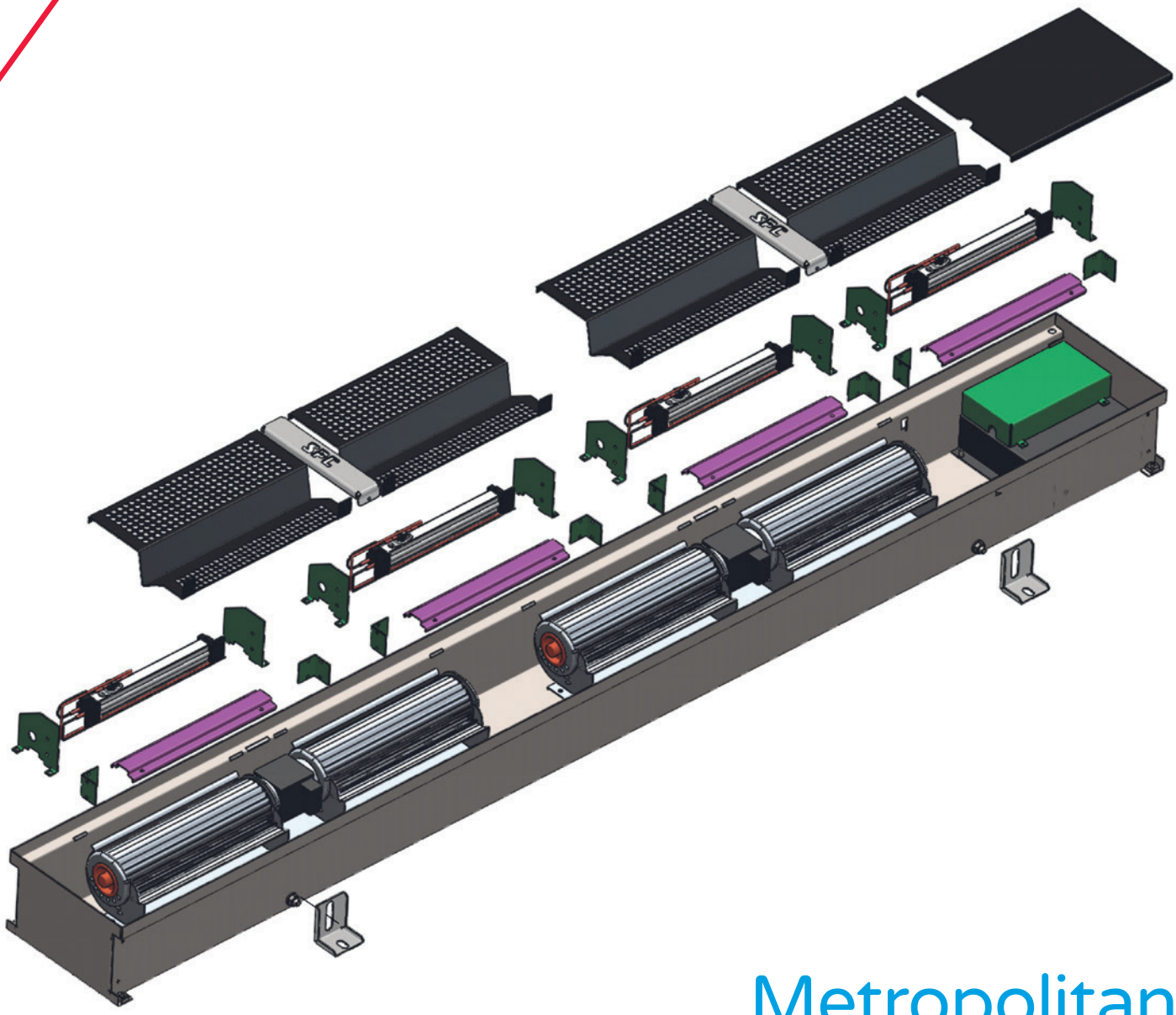

Metropolitan Electric Trench Heaters

Installation, Operation & Maintenance Manual

IOM 82 Issue 3

SPC

Contents

		Page
1	General	3
1.1	Description	3
1.2	Receipt and Preparation	3
2	Installation	4
2.1	Mounting general	4
2.1.1	Suspended/hollow floor	6
2.1.2	Solid/concrete floors	6
2.2	Installation process	6
2.3	Wiring	6
2.4	Control/operation	8
3	Commissioning	8
4	Maintenance	8
5	Fault finding	9
6	Disposal	9

1. General

1.1 Description

This manual covers the SPC fan-assisted range of electric trench warm air heaters. The heaters are available in a number of lengths, each being associated with a particular heat output. The units consist of the trench itself c/w electric heating element, fan(s), electrical connections plus loose roll-up grille and grille trim. Other accessories may be supplied depending on the details of the particular order. Power supply to the units is 230V, single phase, 50Hz which is converted to a 24V dc signal by the integral power supply to match the requirement of the EC fan(s). The heating elements themselves are rated at 230V.

The heaters are intended for use in internal environments and must not be used outdoors or where they are subjected to moisture. They must be installed by experienced heating contractors and electricians in compliance with all statutory regulations. Table 1 gives general details for the standard range of units.

Heater type	Fan-assisted electric trench
Heating element	PTC ceramic electric heaters
Fan type	Tangential
Motor type	ECDC
Power supply	230V/1Ph/50Hz
Casing	Powder coated steel
Roll-up grille	Anodised aluminium bar, plastic spacer, steel spring
Grille trim	Anodised aluminium
Maximum room temperature	50°C non-condensing

Table 1. General specification

1.2 Receipt and Preparation

The units are wrapped and display the serial number, model reference and site reference where appropriate. Installation, operation and maintenance instructions and wiring diagrams, together with any special instructions are all supplied with the unit. On receipt check that all details are correct to the customer schedule prior to opening packaging.

Damage should be reported to SPC immediately. It is recommended that packaging is kept in place and the units stored in a safe area until the necessary services are completed in order to avoid the possibility of site damage.

All units are guaranteed for 12 months from date of delivery.

2. Installation

2.1 Mounting general

The trench heaters are packed fully assembled, apart from the grille and grille trim which should be fitted after the units are fully installed. Grilles and trim are packaged separately along with any other order specific accessories.

Trench heaters are suitable for installation in either concrete or suspended/hollow flooring. If the units are to be mounted in a concrete screeded floor then the trench into which they are fitted must be at least wide enough to allow placement of the suspension feet which extend beyond the outer dimensions of the trench unit.

Trench heaters can be installed as individual elements or can form part of longer continuous runs. If part of a continuous run it is important that the complete run is laid out in the trench or suspended floor to ensure correct fitment prior to screwing down. It is important for continuous runs that the level of the top of each individual section is constant to allow the continuous grille to lay flat when fitted.

Continuous runs may include angle, corner pieces or 'dummy' sections. These should be assembled as part of the complete run and fixed in position along with the active lengths of trench heater.

Trench heaters should be installed close to the window or wall that they are intended to protect, typically 50 to 500mm away. They can be installed with the heat exchanger on either the window side or the room side; the former is recommended.

The grilles supplied for fitting to the top of the trench heaters are suitable for occasional foot traffic. Units must not be fitted where the grilles are likely to be exposed to point loads from chair legs etc., neither should they be fitted directly in front of doorways where they are subjected to excessive footfall. Not only is there a risk of damage or injury but there will be excessive build-up of debris from footwear.

Table 2 shows the various dimensions of the standard trench units. Note that these are only valid for the standard range of units and reference should be made to the actual order details which will supersede this information. When installing in a concrete floor the minimum clearances should be observed; 20mm on either side (beyond mounting feet) and at both ends is recommended but this will need to be increased if electrical conduit is to be run alongside the trench. Note that the width at the feet not the unit width needs to be considered when sizing the trench, feet extend 25mm at either side beyond the nominal width shown below.

Trench length (mm)	1000	1750	2500
Trench width (mm)	225	225	225
Trench height (mm)	125	125	125

Table 2. Dimensions

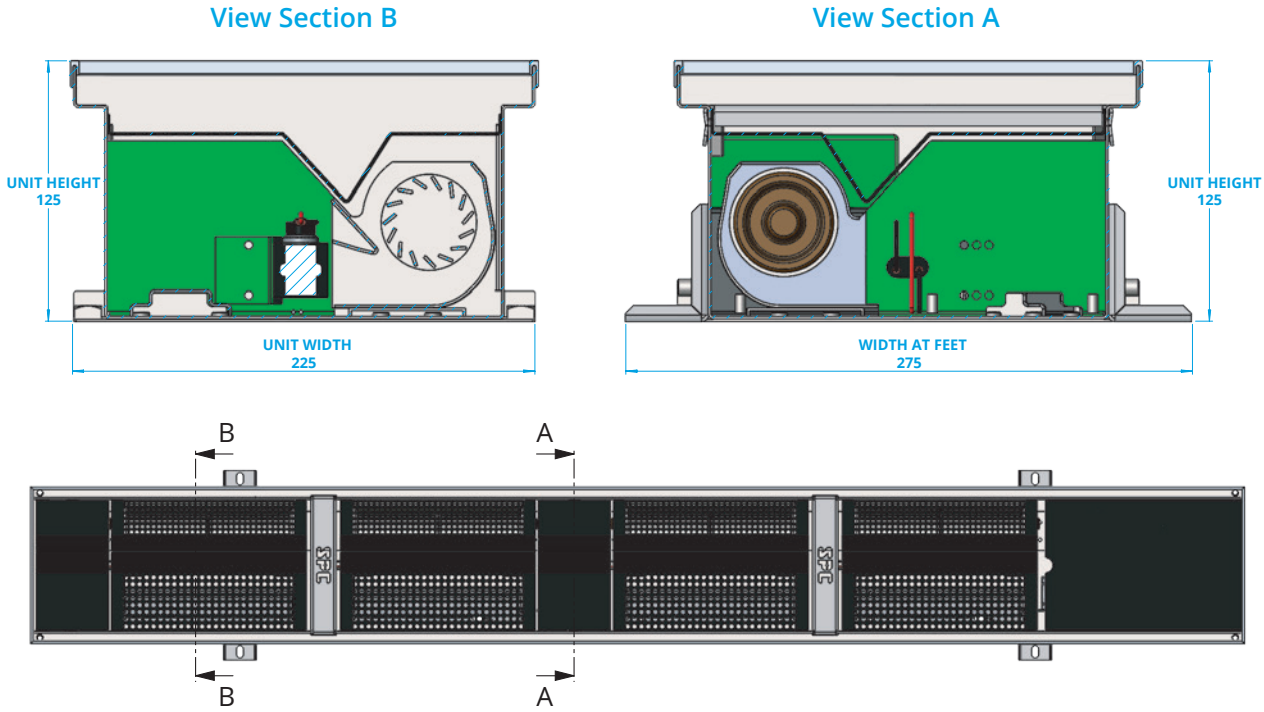

Figure 1. Assembly

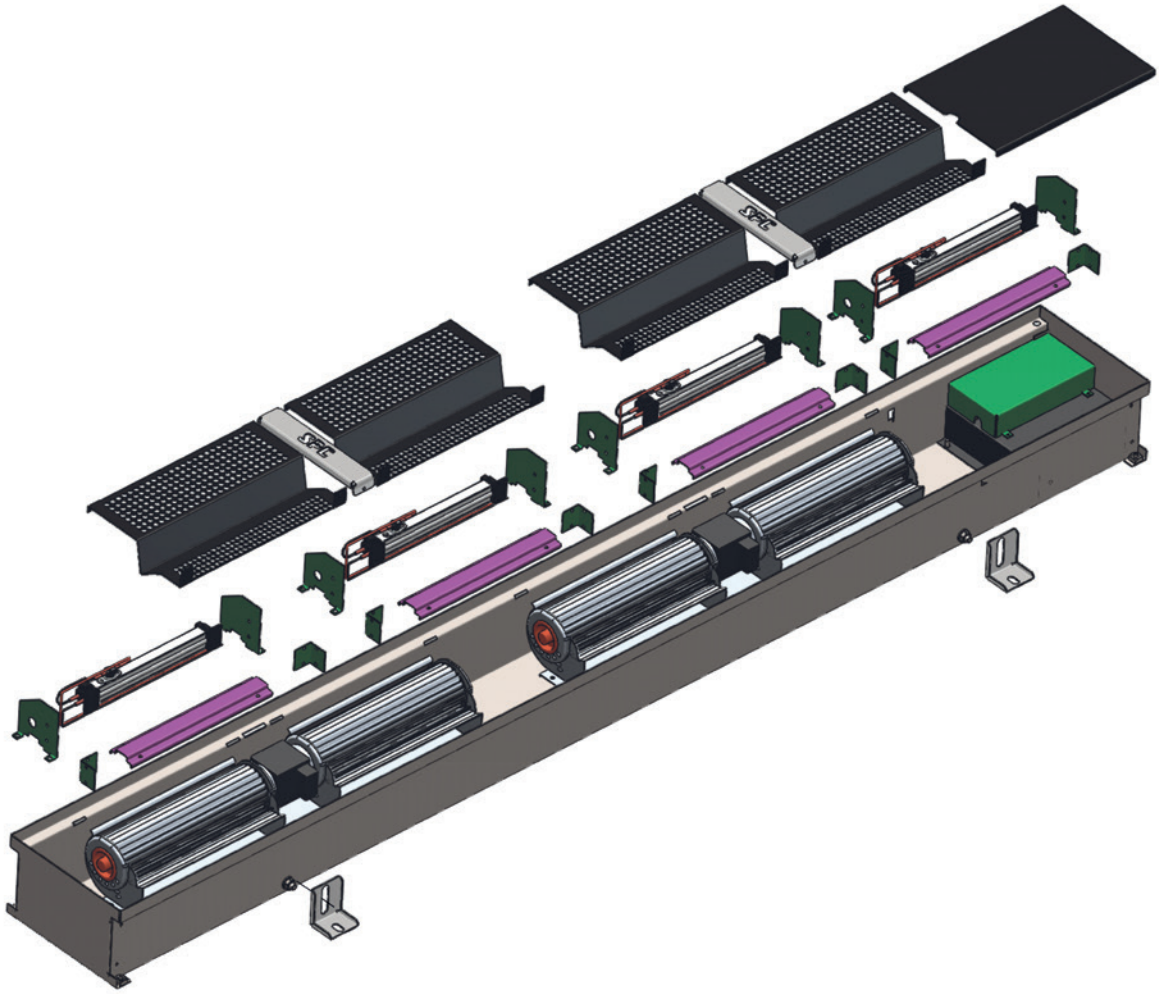

Figure 2. Exploded view

2.1.1 Suspended/hollow floor

The finished height of the trench heater, including grille and trim, should be level with the finished floor surface +/-1mm. It is possible to adjust the finished height of the trench unit using the fixing feet which are height adjustable along with the fine adjustment screws fitted in each corner.

The trench heater should be anchored to the floor using suitable screws and anchors through the slots in the fixing feet and any further fine adjustments made to bring the finished level in line with the finished floor. It is recommended that rubber or foam pads are fitted below the fixing feet.

2.1.2 Solid/concrete floors

The hole (trench) should be cut in the floor in line with the clearances given in section 2.1. If electrical conduits are to be run alongside the trench heaters then the size of the trench must be increased to suit.

Prior to concreting in it is important that the bracing pieces are in place and that the decorative trim and grille are removed. All holes in the sides of the trench heater must be covered during concreting using suitable tapes. A cover must be placed over the top of the trench heater to ensure that no concrete mixture can be spilled inside.

The trench heater must be anchored to the floor via the fixing feet during concreting to ensure that there can be no movement. The correct 'knockouts' must be removed for cable glands and the required power and control cables must be brought inside the trench before concreting.

2.2 Installation process

1. Unwrap the trench heater and place it on the floor. **DO NOT REMOVE THE WOOD PIECE.**
2. Adjust the height using the screws at each end to level out the trench heater.
3. Secure the trench heater using the support feet.
4. Remove the wood piece and connect the coil using flexible hoses and/or wire the electrical components. Once complete, place the wood piece back on the trench heater.
5. Fill in the gap around the side of the trench heater and complete the flooring.
6. Remove the wood piece and fit the grille and/or trim.

2.3 Wiring

Fan-assisted trench units require a standard 230V/50Hz mains power supply, see table below for ratings. Power wiring is via 2 core and earth to the mains terminal block which is accessible after removing the cover of the electrical box. Note, **Units must be earthed**.

Knock-outs are provided in the sides and ends of the casing to allow cables to be taken inside the trench case. Suitable glands should be used to ensure that the cables are secured and the trench sealed.

The EC/DC fan assemblies require a 24V dc supply for their operation; this is provided by an on-board power supply and customer power wiring is restricted to 230V ac. Note that if units are wired in a 'master/slave' arrangement such that they all respond to a single thermostat etc then each individual unit will still require its own supply of power.

Additional control wiring will need to be made. This will depend on the method of control chosen for the units; it is recommended that control wiring is made using wire with a cross sectional area of 1mm2 or greater. The wiring diagram shown below in figure 3 is an example of the control possibilities but the diagram delivered with the actual unit must be used as the aforementioned is only for illustration.

Power cabling to the units should be of a cross-sectional area commensurate with the full load currents for the units in question; the values shown below are only for the standard range of units and the actual order details must be consulted to determine actual values.

Trench length (mm)	1000	1750	2500
Heat output (W)	1000	2000	3000
No. fan sets	1	2	3
Supply (V/Ph/Hz)	230/1/50	230/1/50	230/1/50
FLC (A)	4.5	8.8	13.2

Table 3. Electrical details

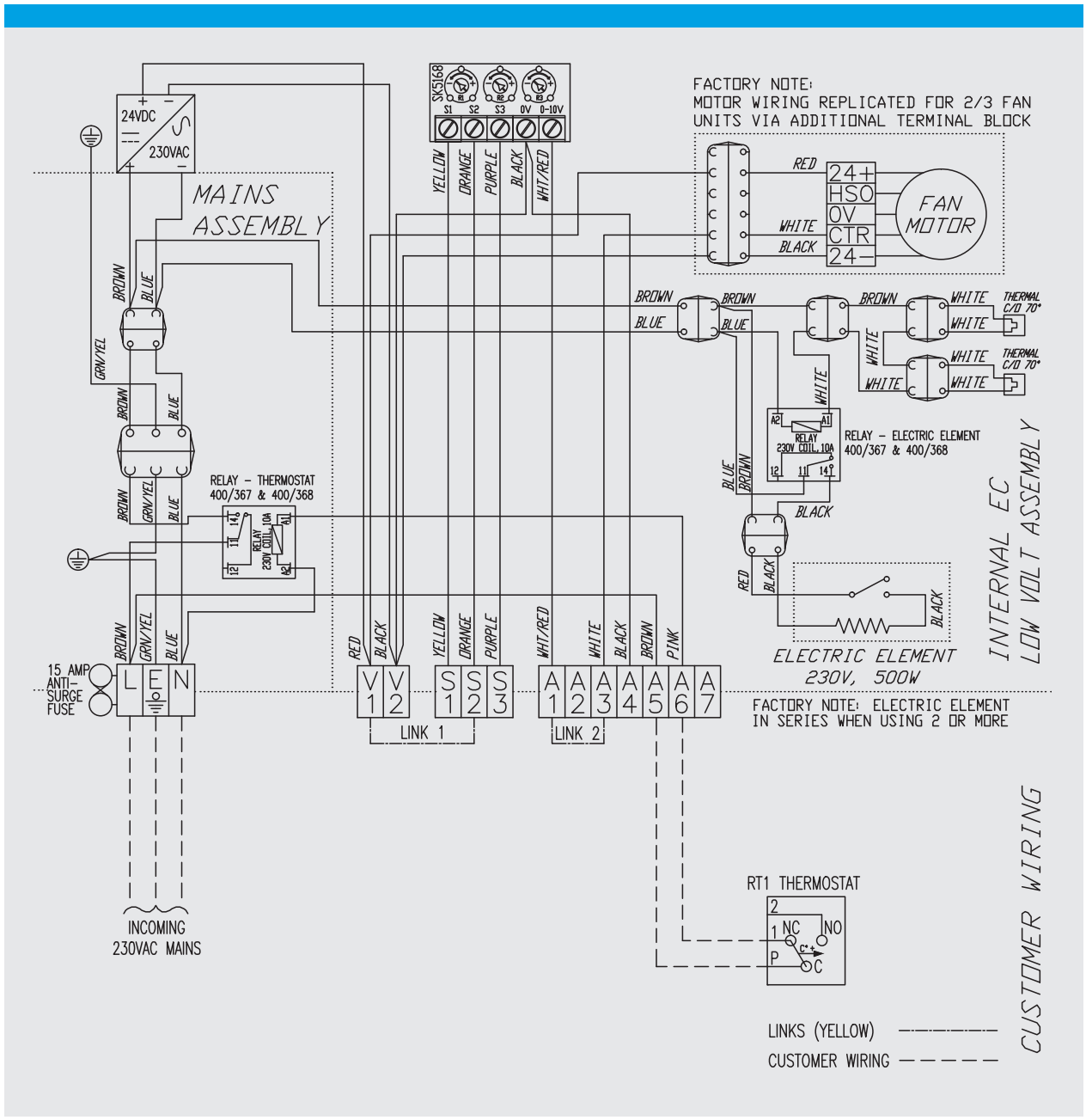

2.4 Control/operation

SPC fan-assisted units incorporate EC/DC fan assemblies which draw in room air and blow it across the heat exchanger prior to the warmed air being released into the space or up the side of the window. For electrically heated units the fan speeds are fixed and set at the factory based on providing the requisite cooling of the heating elements.

Control of the unit's heat output is limited to on/off control which can be provided either by a remote switch or thermostat. Alternatively if the heaters are incorporated into a BMS control system then they can be configured to respond to an enable/disable signal via a relay built inside the unit. This needs to be specified at time of order.

The units require uninterrupted airflow to function. **Under no circumstances must the grille on the top of the trench unit be covered or airflow otherwise obstructed.** This will lead to the heating elements increasing in temperature and tripping out.

3. Commissioning

Commissioning of electric fan-assisted trench heaters requires the following:

- Check rotation of all fans
- Check leaving air temperature
- Check operation of any controls

4. Maintenance

Cleaning – To ensure safe operation of the electric trench unit it is imperative that litter and debris are not dropped or swept inside the unit and that the internal surfaces remain clean. In order to maintain the trench heater at maximum efficiency it is recommended, especially when mounted in dusty areas, that the unit be cleaned internally using a vacuum cleaner nozzle attachment and that this should be done at least once every 3 months depending on the environment. Alternatively, a dry cloth can be used but the unit must not be cleaned using water or spray. Under no circumstances should moisture be allowed in contact with the internal surfaces of the trench heater. The fan/element guard should be cleared of any obstructions. Access to the inside of the unit can be achieved by removal of the roll-up grille. **Always ensure that the unit is electrically isolated prior to removal of the grille for cleaning etc.** The grille itself can be cleaned using a dry cloth or mild detergent if it is removed from the unit first and properly dried prior to refitting.

Fan bearings – The tangential fan(s) incorporate sealed for life bearing and no lubrication is required.

5. Fault finding

Below is a list of common faults and the steps required to resolve them.

Fault	Cause	Remedy
Fan(s) not running	No power	Check electricity supply to unit
	Fuse blown	Check unit fuse and any circuit breakers
	Controls	Check controls are not preventing fan(s) and elements from operating
	Damaged fan/motor	Replace faulty fan assembly
Low leaving air temperature	Controls	Check controls are not preventing fan(s) and elements from operating
	Over heat tripped	Check there is no obstruction to airflow. Check fans are not prevented from rotating

Table 3. Fault finding

6. Disposal

Electrically heated trench units are constructed from ceramic/aluminium finned heating elements and mild steel casings, grilles and grille trim are anodised aluminium with steel springs and plastic spacers. The heat exchanger, casing and grille assembly can all be disassembled and disposed of appropriately. The units include fan decks from mixed materials and printed circuit boards which should be disposed of separately and in line with WEEE directives. It is not recommended that the units are disposed of with domestic waste but that the components are recycled as far as possible.

PART OF THE CARVER GROUP

SPC House
Evington Valley Road
Leicester
LE5 5LU

T: 0116 249 0044
E: spc@spc-hvac.co.uk
spc-hvac.co.uk