CurveVector Cassette Heater

Ceiling-Mounted Comfort with 360° Air Distribution

SPC

CurveVector Cassette Heater

Contents

Overview	3
Key Benefits	3
Applications	3
Energy-Efficient Operation	2
How It Works	4
Technical Specifications	4
Heating Performance	5
Installation Features	6
Smart Suspension System	6
Pipework Connections	6
Construction	6
Fan Assembly	6
Control Options	7
Standard Supply	7
Technical Drawings	7

S & P Coil Products Limited reserves the right to amend specification without any notice, whilst pursuing a policy of continual improvements in performance and design.

Overview

The **SPC CurveVector** cassette heater provides efficient space heating with even air distribution through its innovative circular discharge grille. Designed to fit in standard 600mm x 600mm suspended ceiling grids, the CurveVector delivers even warmth throughout the room whilst remaining virtually invisible, only the stylish circular grille is visible from below.

Key Benefits

- **Space-saving design** – Recessed ceiling installation frees up valuable wall and floor space
- **Even temperature distribution** – 360° circular air discharge eliminates cold spots
- **Energy efficient** – Low energy EC fan motor suitable for low water temperature systems
- **Quiet operation** – Ideal for noise-sensitive environments
- **Quick installation** – Fits standard ceiling grids with adjustable mounting system
- **Low maintenance** – User-friendly design with easy access

Applications

The CurveVector cassette heater is ideally suited for:

- Schools, universities and colleges
- Offices and reception areas
- Retail shops and showrooms
- Libraries and museums
- Banks and public buildings
- Any space where floor and wall areas must remain clear for furniture and fittings

The discreet circular grille and low noise emissions make the unit perfect for environments where aesthetics and acoustic comfort are important.

Energy-Efficient Operation

The CurveVector cassette heater has been designed for compatibility with modern, energy-efficient heating systems including:

- Heat pump installations
- Condensing boilers
- Systems utilising waste heat recovery
- Low temperature heating circuits

CurveVector Cassette Heater

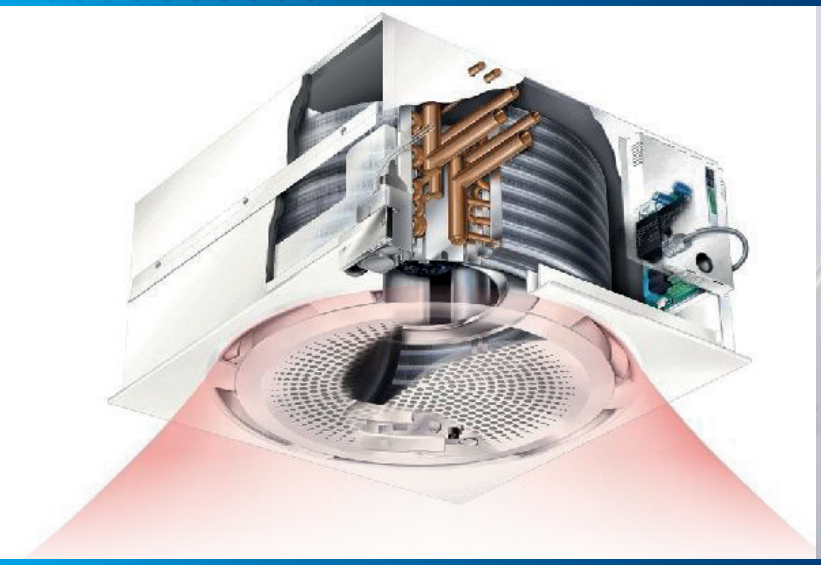

How It Works

The CurveVector cassette heater operates through a simple yet effective recirculation system:

1. Air intake Room air is drawn in through the perforated central section of the circular grille

2. Heating Air passes through the heating coil where it is warmed by the hot water system

3. Discharge Heated air is discharged evenly across 360° through openings around the perimeter of the grille

4. Penetration Air is directed downward at a fixed 45° angle for optimal room penetration

This circular discharge pattern ensures excellent air circulation even at low fan speeds, providing consistent comfort throughout the space.

Technical Specifications

Model: CurveVector

Physical Dimensions:

- Ceiling tile size: 600mm x 600mm
- Overall unit height: 300mm (above ceiling)
- Weight: 32kg

Electrical:

- Supply: 230V / 1ph / 50Hz
- Maximum input current: 1.6A
- Maximum fan power: 155W

Fan Performance:

Speed	Voltage	Airflow (l/s)	Power (W)	SFP (W/l/s)
Low	4V	107	15	0.14
Medium	5V	134	26	0.19
High	6V	158	38	0.24

Fan Performance:

CurveVector	Low	Medium	High
Noise rating (NR)	29	35	39

Based on Q=2, R=4m, V=300m³, Reverberation time = 0.4s

S & P Coil Products Limited reserves the right to amend specification without any notice, whilst pursuing a policy of continual improvements in performance and design.

Heating Performance

CurveVector (2-row coil) - 82/71°C Water, 18°C Space Temperature

Speed	Airflow (l/s)	Output (kW)	Exit Air Temp (°C)	Pressure Drop (kPa)	Water Flow Rate (l/s)
Low	107	6.3	65	3.9	0.14
Medium	134	7.5	65	5.2	0.16
High	158	8.4	62	6.4	0.18

CurveVector (2-row coil) - 80/60°C Water, 18°C Space Temperature

Speed	Airflow (l/s)	Output (kW)	Exit Air Temp (°C)	Pressure Drop (kPa)	Water Flow Rate (l/s)
Low	107	5.5	61	1.1	0.07
Medium	134	6.5	58	1.4	0.08
High	158	7.3	57	1.8	0.09

CurveVector (3-row coil) - 60/40°C Water, 18°C Space Temperature

Speed	Airflow (l/s)	Output (kW)	Exit Air Temp (°C)	Pressure Drop (kPa)	Water Flow Rate (l/s)
Low	107	4.2	51	3.4	0.05
Medium	134	5.1	49	4.1	0.06
High	158	5.9	48	4.9	0.07

CurveVector (3-row coil) - 45/35°C Water, 18°C Space Temperature

Speed	Airflow (l/s)	Output (kW)	Exit Air Temp (°C)	Pressure Drop (kPa)	Water Flow Rate (l/s)
Low	107	2.9	41	2.1	0.07
Medium	134	3.5	40	2.9	0.08
High	158	4.1	40	3.8	0.10

Units feature integral thermostatic valve limiting discharge air temperature to 65°C

Installation Features

Smart Suspension System

- Adjustable mounting brackets allow installation before or after the ceiling fitting
- Unit can be repositioned in any direction for accurate alignment
- Minimal effort required for integration into the ceiling grid
- Two suspension brackets supplied as standard

Pipework Connections

- 2-row coil (H2): 22mm copper
- 3-row coil (H3): 22mm copper
- Maximum operating pressure: 8 bar at 90°C

Construction

- Casing: Zinc-plated sheet steel with reinforcement
- Sound-absorbing insulation fitted internally
- Rotatable plastic grille
- Standard finish: RAL 9016 (white)
- Other RAL colours available on request

Fan Assembly

- Radial backward-curved fan
- External rotor EC motor with ball bearings
- Manufactured in accordance with DIN 40050
- Protection category: IP44
- Thermal overload protection (auto-reset)
- Fan casing and impeller: Aluminium construction

S & P Coil Products Limited reserves the right to amend specification without any notice, whilst pursuing a policy of continual improvements in performance and design.

Control Options

The CurveVector cassette heater is available with a comprehensive range of control options to suit different building types and user requirements.

Remote thermostats – On/off, change speed and proportional control

Remote switches – On/off, change speed and summer/winter changeover

Adjustable low water temperature cut-out – switches off the unit when hot water is not available

Standard Supply

- **Two suspension brackets**
- **Two covering strips for air discharge adjustment**

Technical Drawings

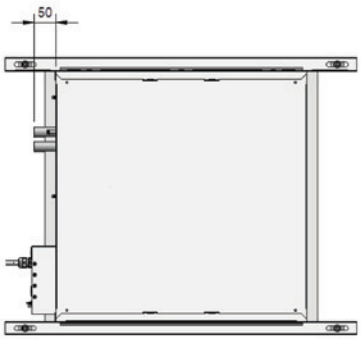

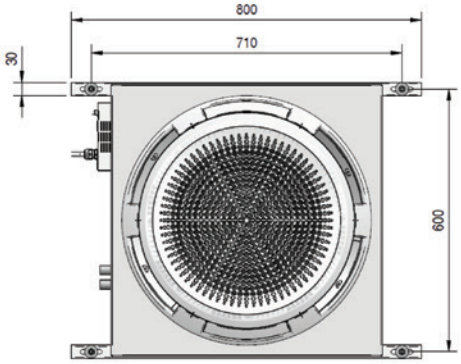

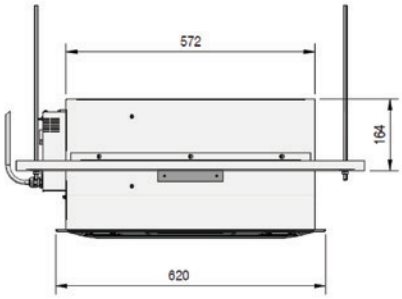

PART OF THE CARVER GROUP

SPC House
Evington Valley Road
Leicester
LE5 5LU

T: 0116 249 0044
E: spc@spc-hvac.co.uk
spc-hvac.co.uk

SPC CurveVector Cassette Heater Brochure Issue 2