SPC Controllable Electric Heater Batteries

Installation, Operation & Maintenance Manual

IOM 93 Issue 6

SPC

Contents

		Page
1	General	3
1.1	Description	3
1.2	Receipt and preparation	5
2	Installation	5
2.1	Mounting	5
2.2	Wiring	6
2.3	Controls	8
2.3.1	Control board	10
2.3.2	Airflow switch	11
2.3.3	Overheat cut-out	11
2.3.4	Duct temperature sensor	12
2.3.5	Display/push-button switches	12
3	Maintenance	13
4	Fault finding	14
5	Disposal	14

1. General

1.1 Description

SPC electric heater batteries with controls are manufactured from stainless steel sheathed elements consisting of nickel/chromium internal resistance wire surround by a magnesium oxide dielectric and a stainless steel sheath. The sheath is from grade 321 stainless steel suitable for high temperature applications with a wall thickness of 0.5mm and an outside diameter of 8mm. The oxide powder makes the elements electrically safe and they can be banked together to provide high rates of heat output.

Heater batteries may be single phase (up to 8kW) or three phase to suit the application and are supplied with thyristors and other control/safety features as detailed below.

The casings are constructed from 0.9mm galvanised steel sheet and can be circular duct-mounted with spigots on either end or rectangular duct-mounted with mez type flanges for easy installation. Special designs and stab-in types are also available to order.

All heaters have electrical boxes with removable panels for wiring and heat sinks for the thyristor controllers. The face of the panel incorporates the display/push-button switches where setpoints and settings can be adjusted.

Electric heater batteries are only suitable for mounting internally. If they are fitted externally then they must be suitably protected to ensure that they are not exposed to the elements as they are not IP rated. All heaters are tested prior to despatch; they undergo a 500V Megger test, a 1750 volt flash test and final inspection.

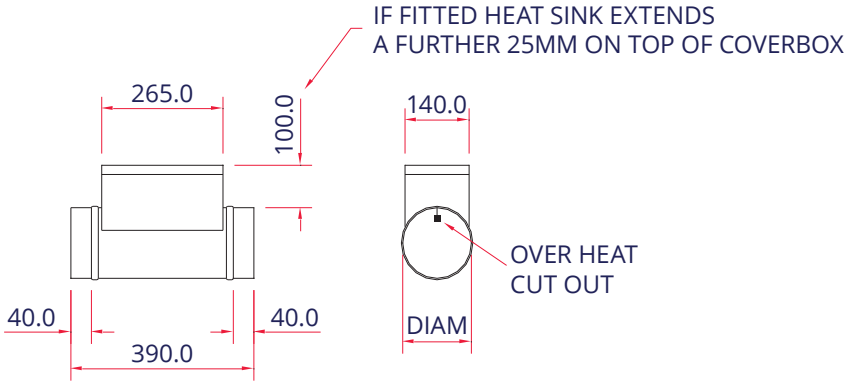

Dimensions of circular units up to 160mm diameter

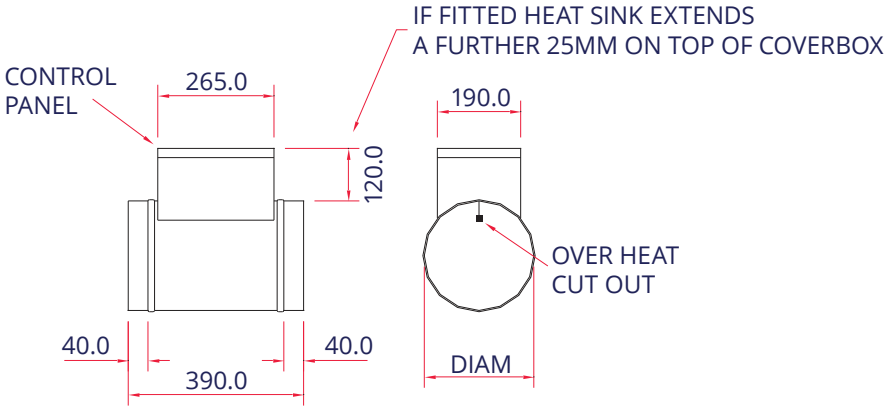

Dimensions of circular units 200mm diameter and above

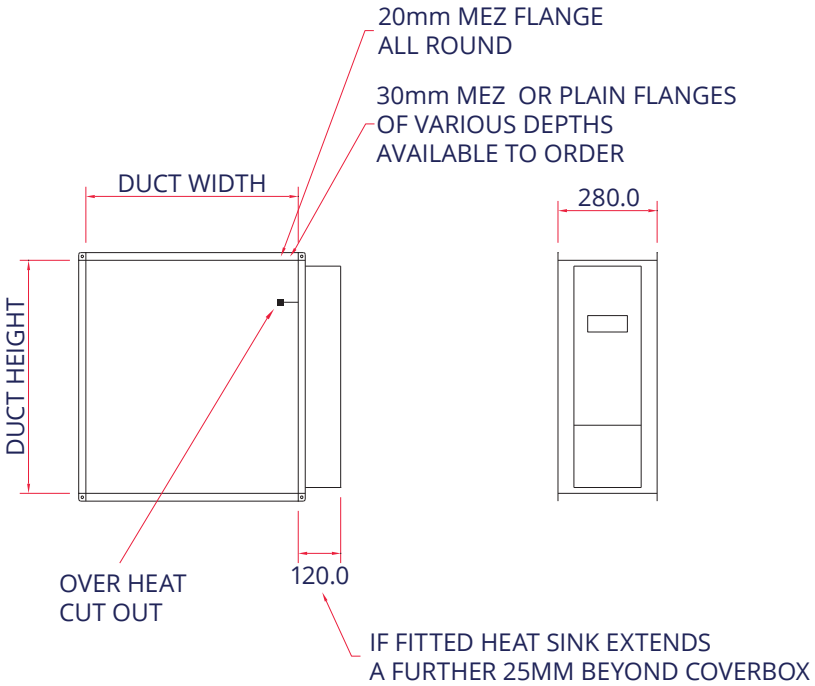

Dimensions of rectangular units

1.2 Receipt and preparation

On receipt check that all details are correct against the delivery schedule. Report any damage to the carrier and SPC immediately. It is recommended that any packaging is left in position until the heater batteries are ready to be fitted and that they are stored suitably so as to avoid the risk of damage. They must not be stored in areas where they may be subject to moisture or high humidity.

2. Installation

2.1 Mounting

Heater batteries are intended for mounting into ductwork either rectangular or circular. The heater battery would normally be sized to suit the size of the ducting but on occasion there will be ductwork transformation pieces between the heater batteries and the ductwork so as to achieve a suitable velocity across the heater.

Rectangular heaters have a mez type flange all round or plain flanges all round to special order, the latter can be drilled through to allow bolting to corresponding holes in the ductwork flange. Gasket seals should be used between mating flanges and, where necessary, additional clamps. The heater battery needs to be mounted in the correct orientation such that the overheat cut-out is at the top not bottom of the duct.

Circular heater batteries have male spigot connections suitable for joining to adjacent socket connections; the joint between circular battery and adjoining ducting should be sealed. The circular battery needs to be rotated into such a position that the overheat cut-out is not at the bottom of the ducting.

Whenever electric heater batteries are fitted in ducting they will need to be exposed to even air velocities. Uneven velocities mean some areas of the elements will be starved of air and will overheat. Ideally there should be 5 equivalent diameter of free ducting upstream or downstream of the battery but a minimum of 1m either side must be maintained prior to any bends. See the diagram below.

An airflow arrow is fitted to the casing of the heater battery and it is recommended that this is followed for optimum operation of the in duct temperature sensors.

If heater batteries are to be fitted inside air handling units then they will be of rectangular cross section. They will need to be supported inside the air handling unit so that they cannot move. The overall size of the heater battery will be less than the available size and the free area will need to be blanked off to prevent air bypass. Whenever components need to be installed very close to electric elements then they may need to be protected by a radiation shield to prevent damage. If electric heaters are installed in air handling units such that they are directly on the outlet of the fan then a mixing screen must be used to ensure that there is reasonably even airflow across the entire face. If areas are subject to very low airflows then they will overheat.

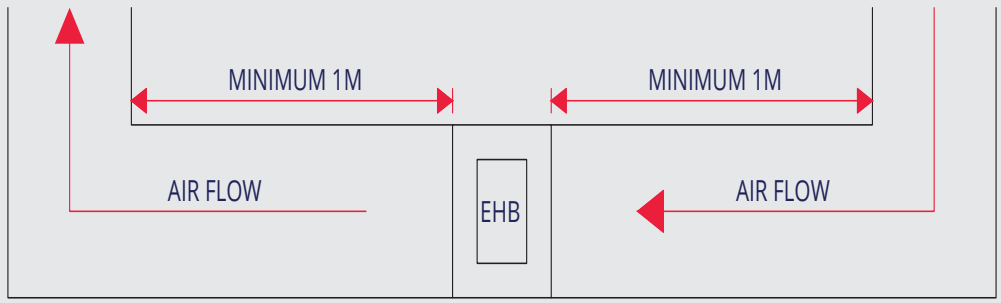

Minimum distance installation diagram

2.2 Wiring

There are a number of different wiring regimes depending on both the output rating and power supply. These are shown on the drawings below and refer respectively to;

- Single phase units up to 4.5kW
- Single phase units up to 8.0kW
- Three phase units single stage thyristor control (24kW max)
- Three phase units multiple stage with thyristor control on final stage (135kW max)

The three phase units will be staged whenever the power draw is excessive and the number of stages will be observed by the number of contactors fitted inside the control box.

Wiring to the heaters should be made through one of the knock-outs in the side of the electrical box to the terminal block inside. A suitable gland or grommet must be used where the cable enters the box. Three phase units have their elements wired to a star point and do not require a neutral connection; the neutral cable is, however, required for the controls. Wire sizes must be selected to suit the heater rating.

All wiring must be undertaken by a qualified person and in line with the latest IET regulations.

Note. The unit must be electrically isolated before removing the cover on the control box to facilitate any wiring work.

*Attention

The terminals on the PCB inside the front panel include both high voltage (400V, 230V ac) and low voltage (0-10V dc). Ensure that high voltage is not connected to the low voltage terminals; do not attempt to wire up the units without the correct wiring diagram to refer to.

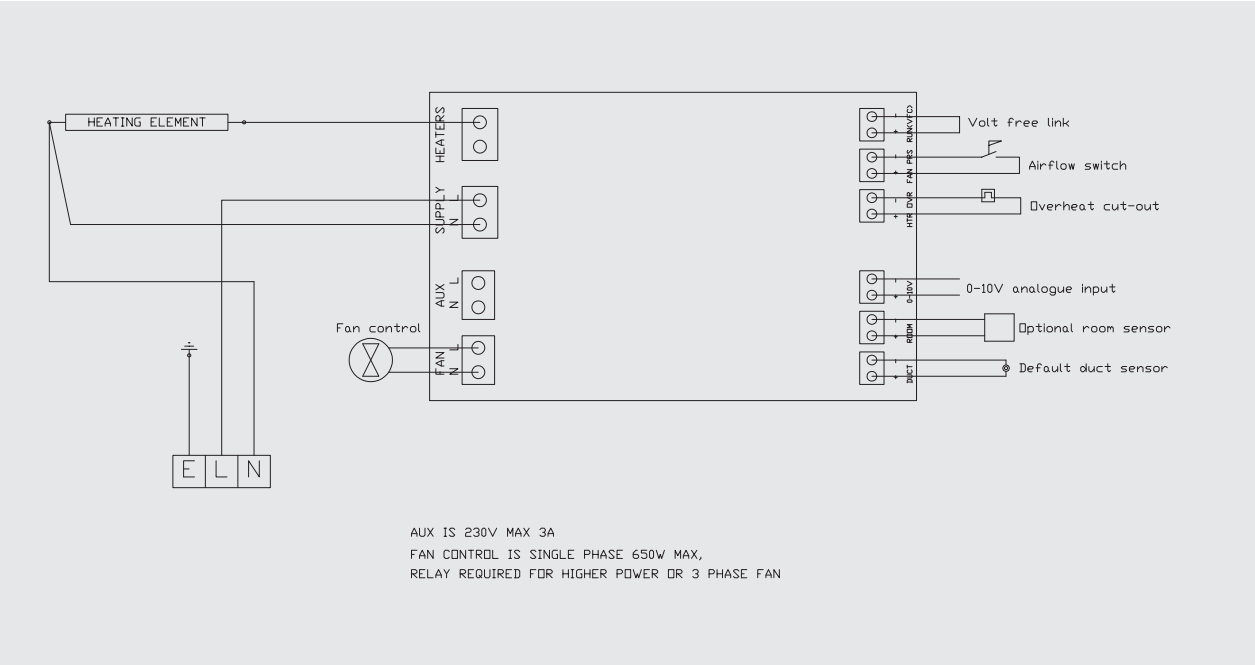

Wiring of single phase units up to 4.5kW

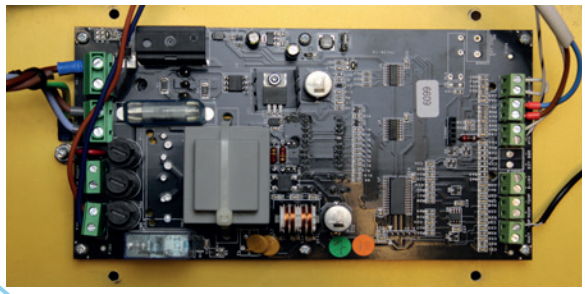

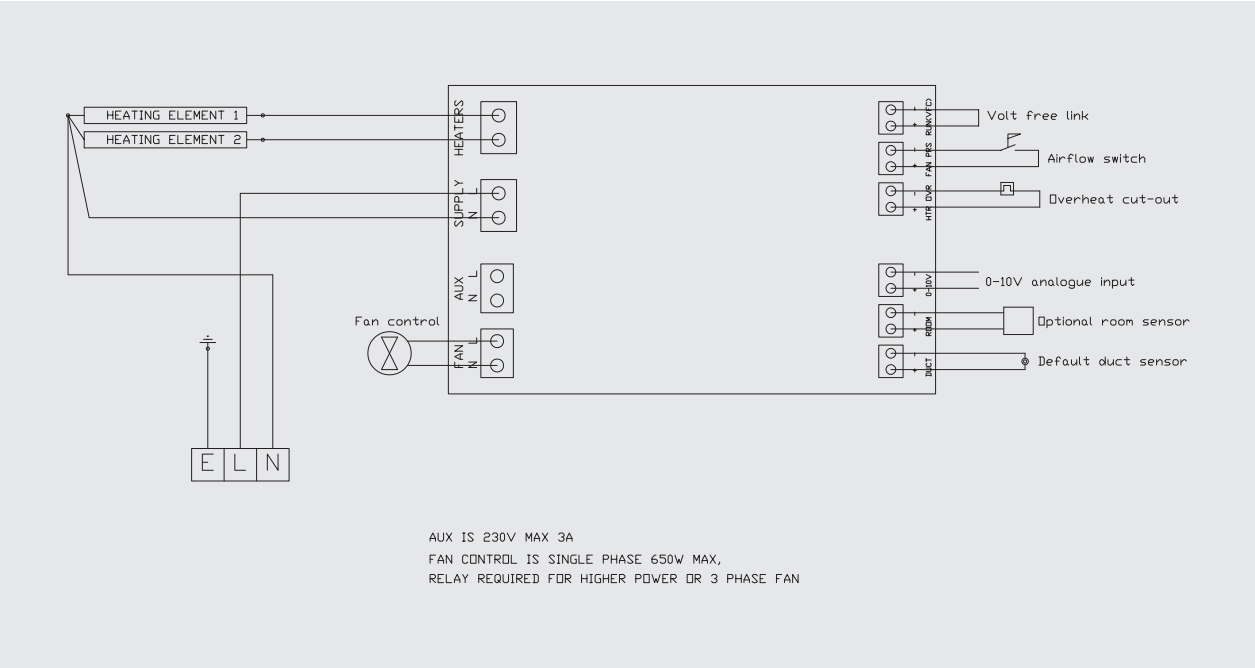

Wiring of single phase units up to 8.0kW

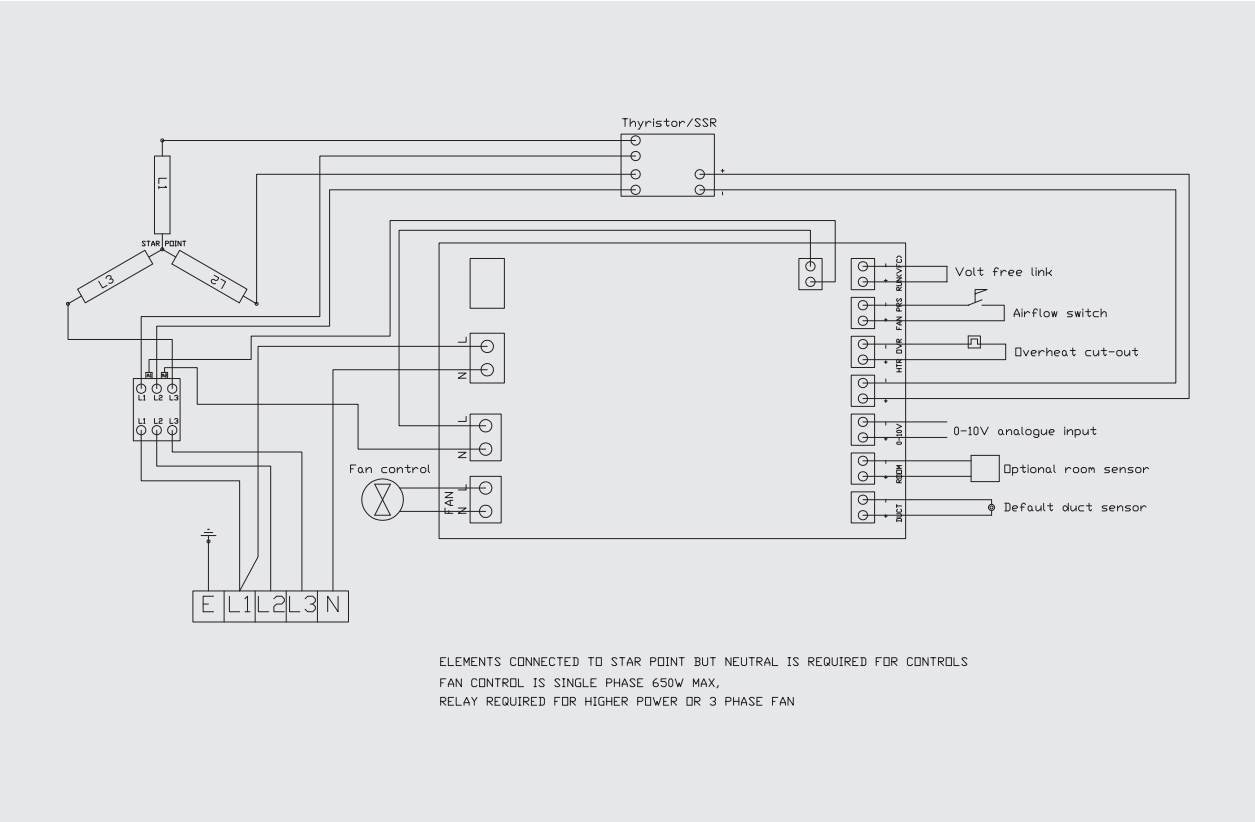

Wiring of 3 phase units up to 24kW (single step)

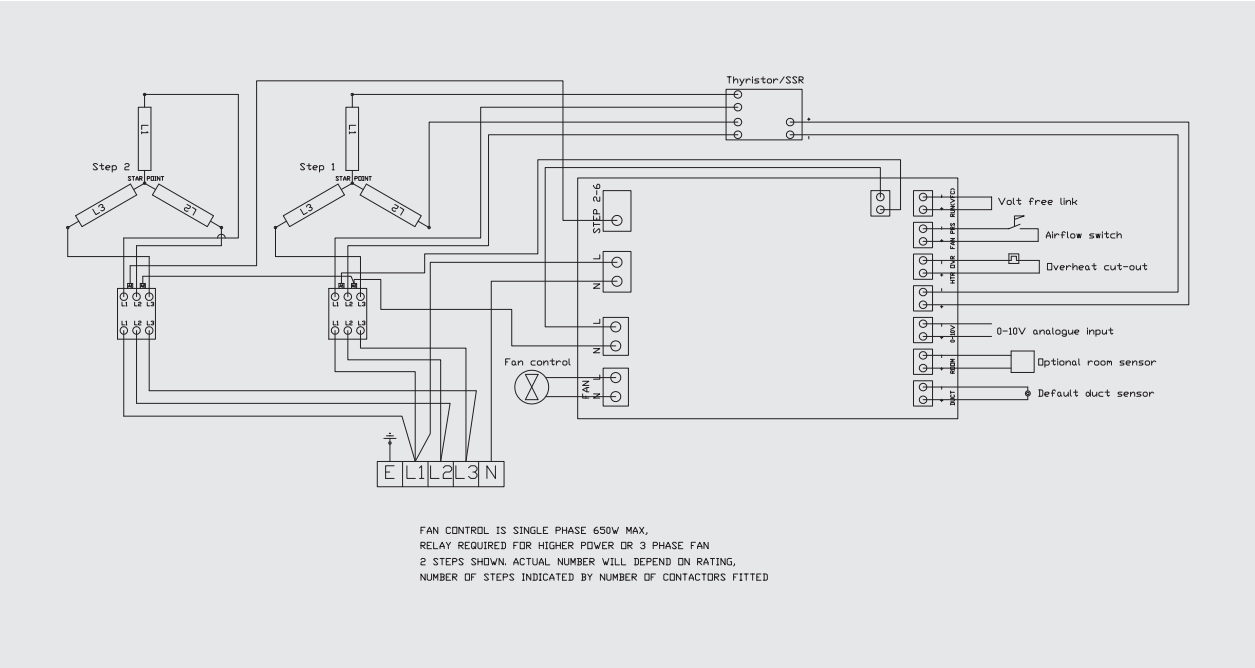

Wiring of 3 phase units up to 135kW (multiple steps)

2.3 Controls

The heater batteries comprise elements, control board, flow switch, overheat cut-out, duct-temperature sensor and display/push-button switches. Options include:

- A pcb that can be plugged into the main board offering a fault signal to a BMS and a more sensitive flow switch
- Room mounted temperature sensor and setpoint adjuster

If special options are supplied then details regarding their wiring will be supplied with the units. See below for the standard options.

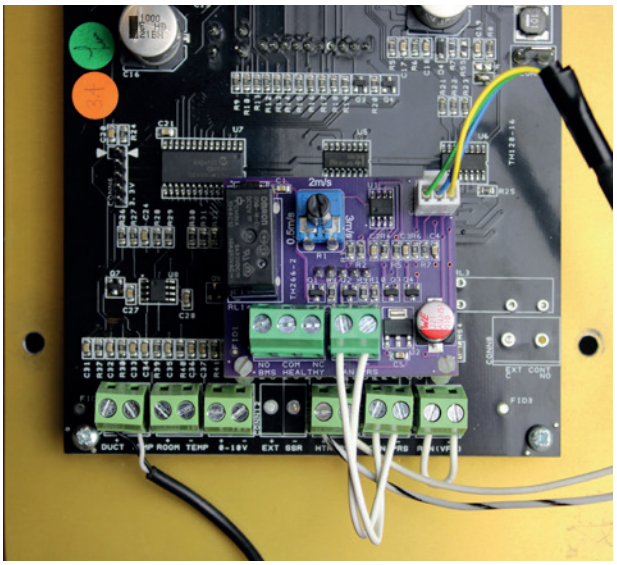

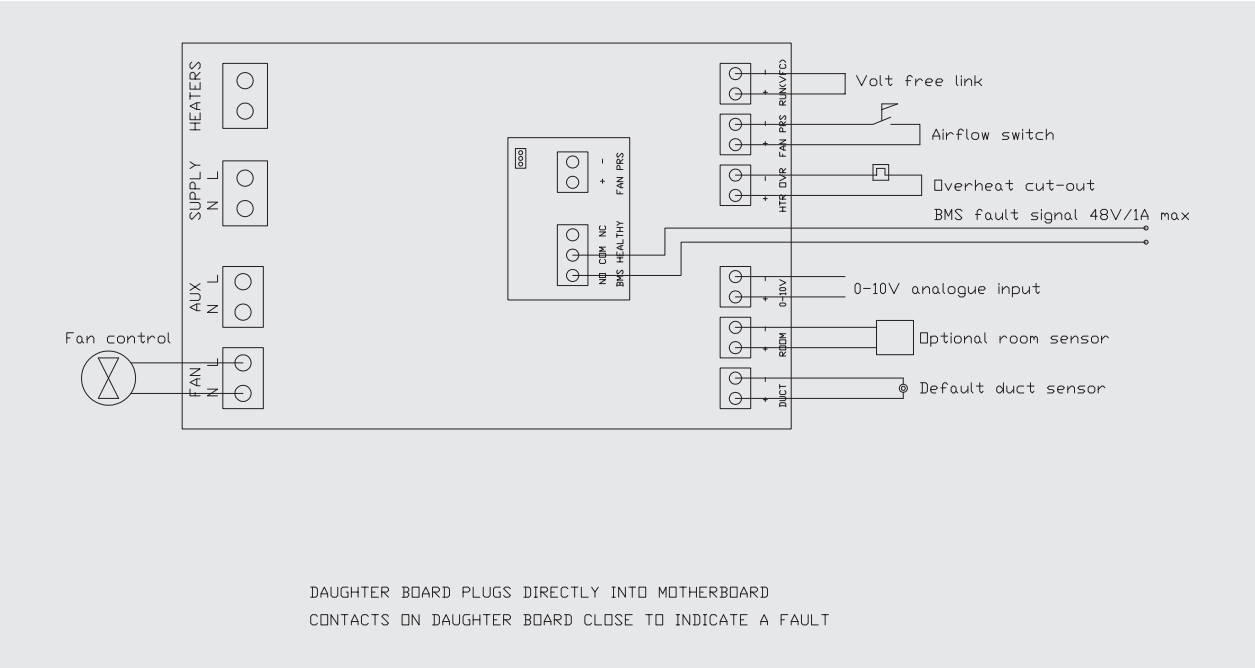

Wiring of BMS fault board

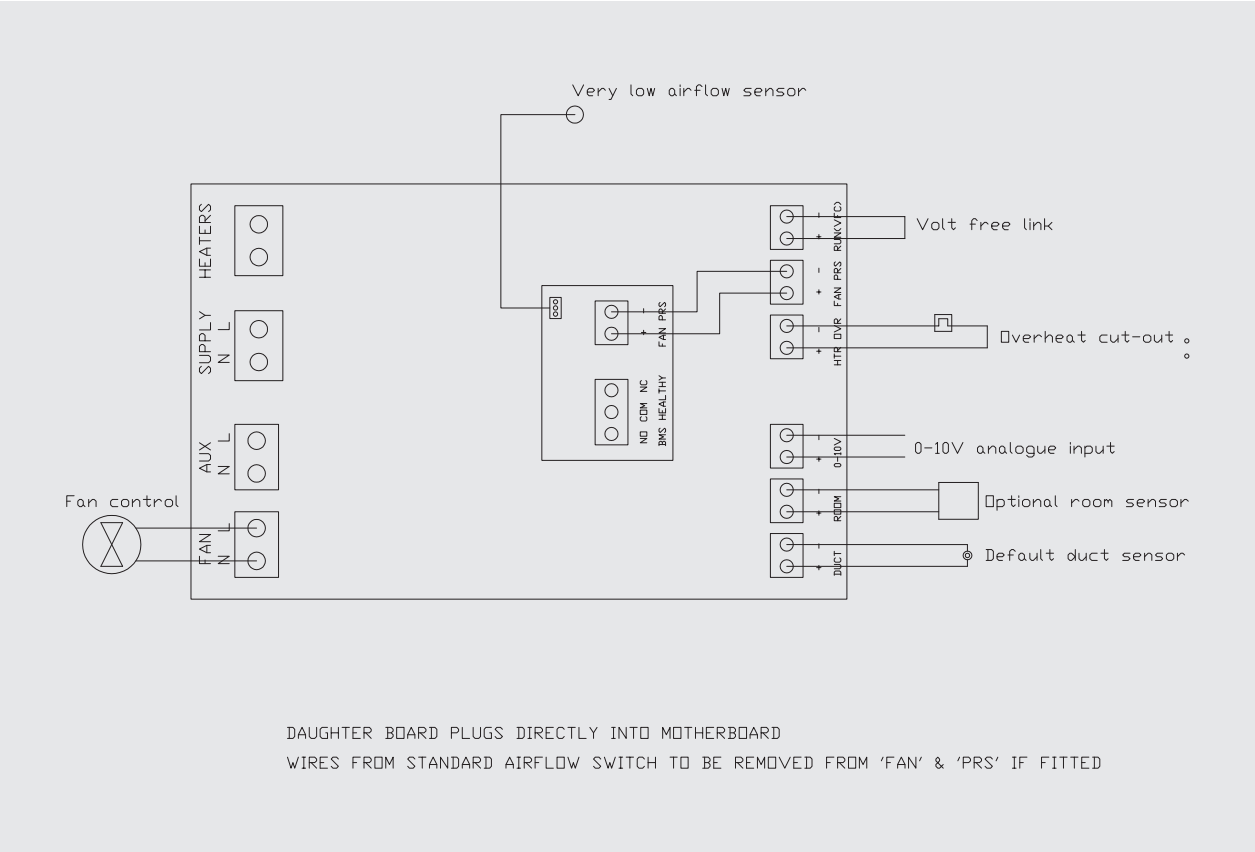

Wiring of very low airflow sensor

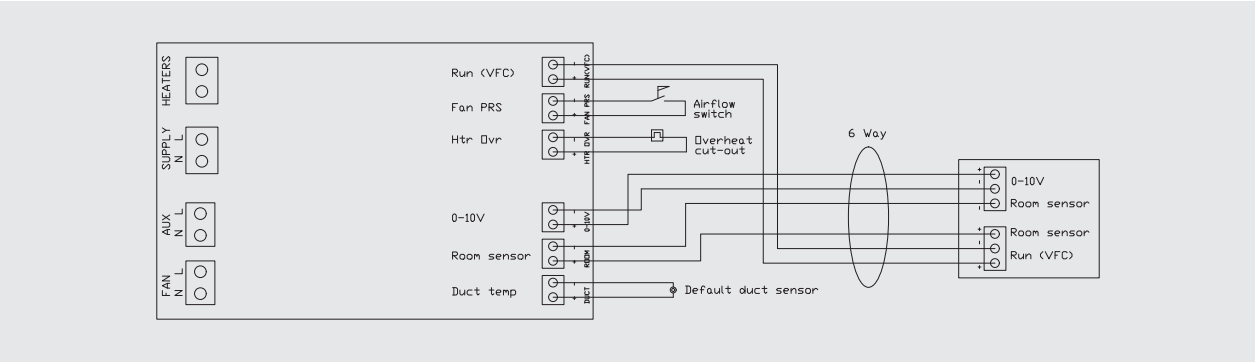

Wiring of room mounted sensor/setpoint adjuster

2.3.1 Control board

The control board is powered by a 230V supply taken directly from the wiring to the heater battery; it is responsible for controlling the power to the elements both switching them on and off and modulating the output via the on-board thyristor controller. The board receives inputs from the duct temperature sensor or optional room temperature sensor or from a BMS signal plus the airflow switch and over heat cut-out. The board can also be used to control a fan and includes an additional link which can be used for remote enable/disable.

Fan control from the board is via the terminals marked 'FAN 1/2'. Two fan modes F1 and F2 are available and details of how to swap between the two are given under the description of the display/push-button switches below. F1 mode means that the fan will only run when the unit is calling for heat while F2 means that the fan will run constantly to provide ventilation. A fan run on of a minimum of 1 minute is built into the controller.

A pair of terminals marked '0-10V' are included on the board and these are used for input from a BMS system. The type of BMS input control can be set up to be open or closed loop. Three control modes are available; c1 the default which is local operation and the setpoint is set directly on the controller using the display/buttons, c2 is BMS closed loop and c3 is BMS open loop. BMS closed loop means that the BMS controls the setpoint temperature via the '0-10V' and BMS open loop means that the BMS directly controls the heat output rate via the thyristor and no temperature setpoint is applicable. See below in the display/push-button switches section for setting the unit up in each of the three control modes. Additional control mode C4 should be used only with TRC-2 (Room sensor/setpoint adjuster).

2.3.2 Airflow switch

The airflow switch is supplied as standard and is set to a pressure difference of 20Pa. The air tubes are supplied loose and should be connected to the '+' and '-' connections on the flowswitch. It is possible to just use one of the sensing tubes with the other left open to the atmosphere but positioning of the tubes should ensure that they are either side of a resistance which will offer a minimum of 20Pa when there is airflow. This can be across the fan itself or a filter or similar. When no airflow is sensed the elements will not be energised but will reset automatically when flow is restored.

If the pressure switch is not required it can be linked out between the terminals on the main control board marked 'FAN' and 'PRS'.

If a lower pressure differential is required, then an optional low airflow switch can be supplied. This is part of a pcb which fixes to the main control board and if used will bypass the operation of the standard pressure switch which needs to be wired out.

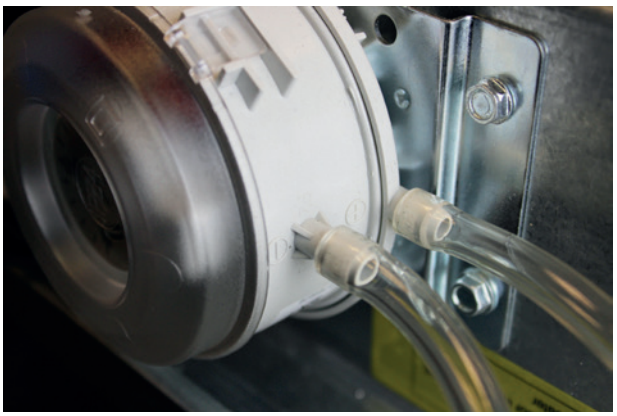

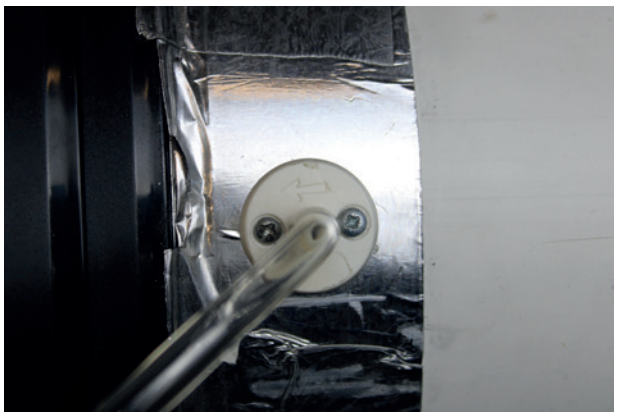

2.3.3 Overheat cut-out

The cut-out is factory fitted inside the ductwork casing above the heating elements. It switches at a fixed temperature of 125°C and de-energises the elements when excess temperatures are sensed.

As a cut-out could indicate a serious problem it is necessary to manually reset the controller by switching off at the isolator and back on when the issue has been resolved.

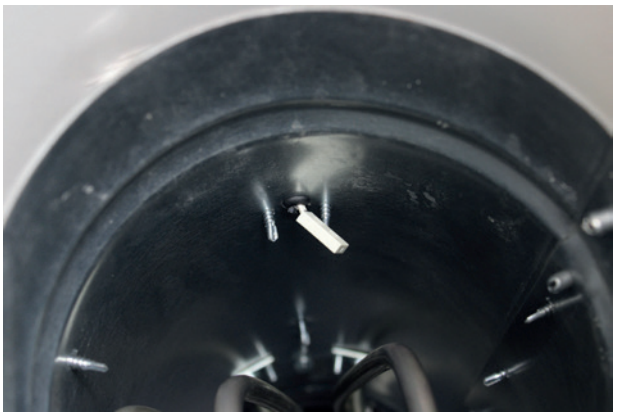

2.3.4 Duct temperature sensor

This is an IP rated sensor which needs to be installed in the ducting downstream of the heater battery. It senses the temperature of the supply air and allows the controller to compare it to the temperature set on the control panel or by the BMS. The difference between sensed and setpoint temperature is used to determine the thyristor response.

In order to fit the temperatures sensor a 16mm hole needs to be cut/drilled in the side of the ducting. It is recommended that the sensor be fitted a minimum of 1m downstream of the heater.

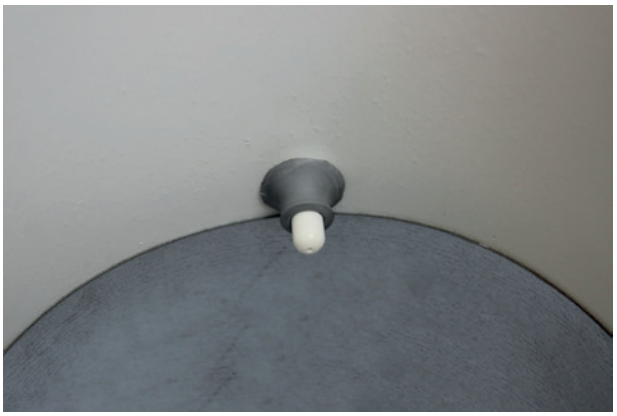

2.3.5 Display/push-button switches

The removable front of the control panel incorporates a two digit display, up and down buttons and heater/power/error indicators. The switches are used to set the temperature setpoint and to configure the controller, the indicators give operational information.

The **'HEATER'** indicator is illuminated yellow when the system is calling for heat. When the temperature is significantly below setpoint this indicator will be on solidly but will start flashing to indicate modulation from the thyristor when setpoint is approached. The light will go out when the temperature is reached.

The **'POWER'** indicator is illuminated solid green whenever power is supplied to the unit indicating that the unit is 'LIVE'.

The **'ERROR'** indicator lights solid red if an error occurs and the code is displayed in the panel (see fault finding for description of codes). If the red light is flashing that indicates that the fan is in run-on mode. The fan should always be allowed to run on to dissipate heat prior to switching off at the isolator.

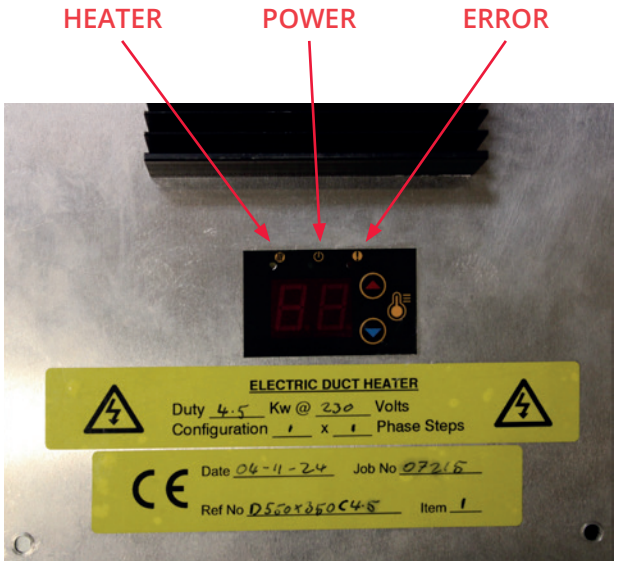

The push-buttons can be used to configure both the fan operation mode and the control mode as follows:

Press and hold the up and down keys. After 5 secs the display will change to display the fan mode, release the up and down keys and then change the option between 'F1' and 'F2' with the up and down keys. After 10 secs without anything being pressed the display will change to the control mode setting.

Local control mode c1 is the default, this can be changed to c2, c3 or c4 using the up and down keys. c2 is closed loop BMS and c3 is open loop BMS, c4 is only available if the option of a room controller is being used. After 10 secs with no keys being pressed the display changes back to normal unless c2 mode is selected.

If c2 mode was selected then the display shows the maximum setpoint. This is the setpoint when the BMS input is 10V and can be changed using the up and down buttons. The minimum setpoint will always be 0°C corresponding to 0V input. Again, after 10 seconds with no button pressed the display returns to normal.

3 Maintenance

The heater battery casing and heating elements may collect dust/debris over time and this should be cleaned/removed to ensure safe and optimal operation. The heater batteries must only be cleaned with dry cloths or compressed air/vacuum; liquids must not be used. The heater battery must be electrically isolated and the elements allowed to cool close to room temperature prior to cleaning.

If filters are fitted upstream of heater batteries then they must be regularly cleaned. Dirty filters will partially block the airflow leading to overheating and tripping of the elements.

4 Fault finding

The display on the front of the control panel displays error codes. Details of these error codes are shown below:

Fault	Remedy
E1	Heater 1 failed, indicates damaged element or wiring to it
E2	Heater 2 failed, as above for unit with more than 1 element
E3	Overheat trip, indicates that excessive air temperatures are being generated; investigate before resetting by isolating and then turning back on
E4	Airflow fault, sensed by the airflow switch and will reset automatically when the airflow is restored
E5	Duct sensor fault, indicates a fault with either the duct sensor or the wiring to it

In addition to the above codes the indicator lights on the display can give information. First check is the green 'POWER' light, if this is not solidly illuminated then there is no power to the unit and the supply and isolator must be checked.

If the 'HEATER' light is not illuminated then the control is not calling for heat and the setpoint must be satisfied. Check the control settings in this instance.

If the 'HEATER' light is constantly and solidly illuminated then the setpoint is never being approached. Either the heating system has been undersized or the setpoint is not suitable. The 'HEATER' light should flash regularly when operation is good as it indicates that the thyristor is switching close to the setpoint temperature.

5 Disposal

Electric heat batteries are constructed from various metals and plastics. It is not recommended that they be disposed of with household waste but should be recycled as far as possible.

PART OF THE CARVER GROUP

SPC House
Evington Valley Road
Leicester
LE5 5LU

T: 0116 249 0044
E: spc@spc-hvac.co.uk
spc-hvac.co.uk