CiRRUS
UNIT HEATERS

SPC

Contents

		Page
1	CiRRUS Unit Heaters	3
2	Dimensions	4
3	Performance Data	5
	3.1 | Water Heated Units	5
	3.2 | Electric Heated Units	6
4	Mounting Height/Coverage	7
5	Noise Data	8
6	Electrical Data	8
7	Configurations	9
	7.1 | Horizontal Mounting	9
	7.2 | Vertical Mounting	10
8	Accessories and Options	10
9	Controls	11
10	Specification	12

S & P Coil Products Limited reserves the right to amend specification without any notice,
whilst pursuing a policy of continual improvements in performance and design

1 CiRRUS Unit Heaters

The SPC range of CiRRUS unit heaters are designed for installation in industrial or heavy commercial spaces; they are specifically intended for use in factories, warehouses, storage spaces, distribution centres, garage spaces etc. The unit heaters blow a powerful jet of air angled into the occupied space to provide local or overall heating of the work/storage area.

CiRRUS unit heaters consist of a powerful axial fan with EC motor which draws in space air, blows it across an optimised heat exchanger (coil) and discharges the air through a series of adjustable, angled louvre blades. The casing is powder coated steel and holds the motor/fan basket grille on the back and the coil towards the front with the pipe connections protruding through the casing. The electrical box is located on the side of the unit and a number of hanging bracket options are available.

The EC fan is continuously controllable via a 0-10V signal allowing the fan to rotate and move air at a rate commensurate with the height at which the units are required to be mounted.

Horizontal unit heaters are intended for wall mounting and blow a jet horizontally through the angled discharge louvres towards the floor. Vertical units would normally hang from the ceiling on drop rods and blow a vertical jet downwards into the lower space. An optional 4 way louvre is available for vertical units.

S & P Coil Products Limited reserves the right to amend specification without any notice, whilst pursuing a policy of continual improvements in performance and design

2 Dimensions

Industrial Unit Heater

Model	DIM A	DIM B	DIM C	X
Ci5	500	252	335	1"
Ci6	600	262	360	1"
Ci7	700	262	360	1¼"
Ci8	800	290	395	1¼"

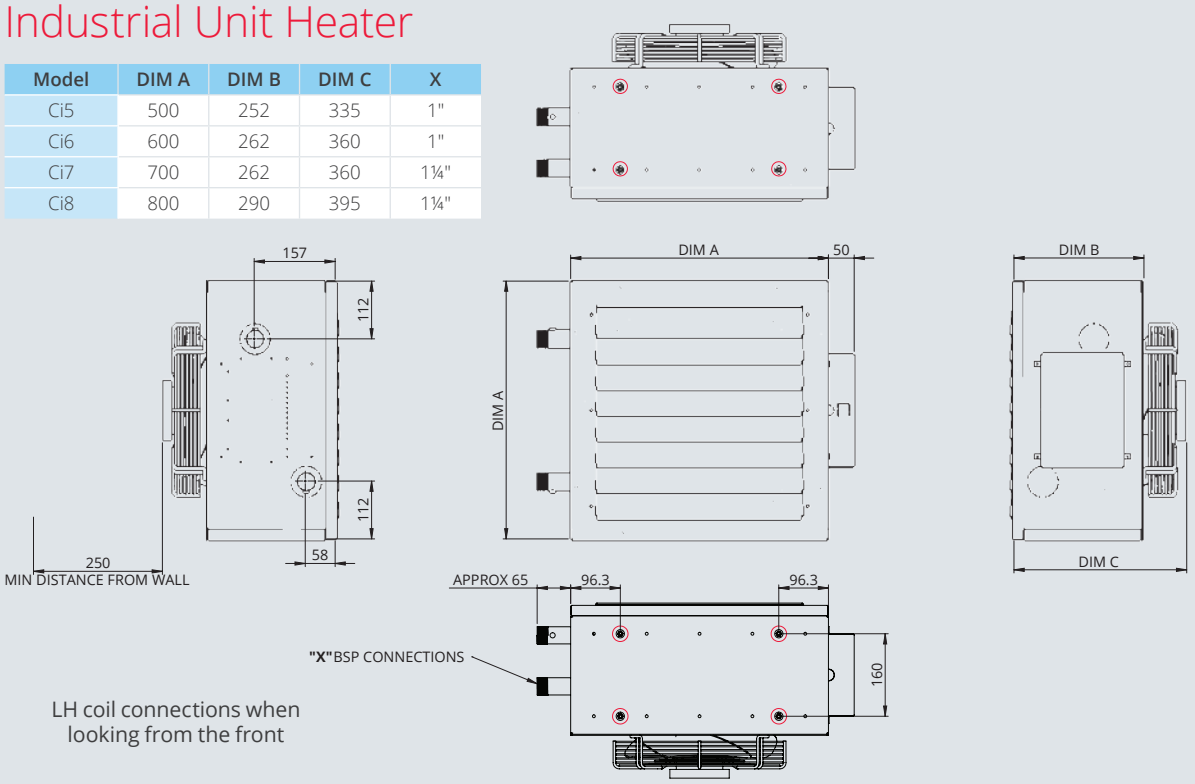

Figure 1. Major dimensions

Unit weights are approximate as given in the table below, depending on bracketry arrangement and optional extras.

Unit size	Ci5	Ci6	Ci7	Ci8
Approx. dry weight (kg)	30	45	55	70
Int. vol. 2 row coil (l)	0.9	1.5	2.7	3.7
Int. vol. 3 row coil (l)	1.2	2.0	3.5	4.9
Int. vol. 4 row coil (l)	1.5	2.5	4.3	6.0

Table 1. Unit weights/volumes

S & P Coil Products Limited reserves the right to amend specification without any notice, whilst pursuing a policy of continual improvements in performance and design

3 Performance Data

3.1 Water Heated Units

The basic unit for low pressure hot water is supplied with a 2 row coil. This is suitable for conventional boiler temperatures whereby the hot water flow temperature is close to 80°C. Increasingly, hot water temperatures are being forced downwards and emitters are paired with condensing boilers and heat pumps. SPC can offer enhanced depth coils of 3 or 4 tube rows to compensate for the reduced hot water temperatures provided and maintain output levels. A 3 row coil could be used with conventional boiler flow temperatures to enhance output but will increase the leaving air temperature and buoyancy of the air. The 4 row coil should not be used with conventional boiler temperatures.

Size	Ci5			Ci6			Ci7			Ci8		
Speed	Low	Medium	High	Low	Medium	High	Low	Medium	High	Low	Medium	High
Airflow (m3/s)	0.23	0.35	0.46	0.40	0.60	0.79	0.55	0.81	1.10	0.85	1.26	1.69
Output (kW)	6.6	8.2	9.2	12.4	15.1	17.2	17.1	20.8	24.0	26.6	32.4	37.0
Water flow (kg/s)	0.16	0.20	0.22	0.30	0.36	0.41	0.41	0.50	0.57	0.63	0.77	0.88
Water pressure drop (kPa)	5.2	7.7	9.3	23.4	33.5	42.2	8.7	12.5	15.6	24.2	34.4	44.0

Table 2. Performance of units fitted with the standard 2 row coil and operating against conventional boiler flow and return temperatures of 80/70°C and an air temperature of 18°C.

Size	Ci5			Ci6			Ci7			Ci8		
Speed	Low	Medium	High	Low	Medium	High	Low	Medium	High	Low	Medium	High
Airflow (m3/s)	0.23	0.35	0.46	0.40	0.60	0.79	0.55	0.81	1.10	0.85	1.26	1.69
Output (kW)	6.8	8.3	9.4	12.7	15.5	17.5	17.5	21.3	24.5	27.2	33.1	37.8
Water flow (kg/s)	0.15	0.18	0.20	0.28	0.34	0.38	0.38	0.46	0.53	0.59	0.72	0.82
Water pressure drop (kPa)	4.6	6.7	7.6	20.5	29.3	36.9	7.6	10.9	13.5	21.5	30.8	38.4

Table 3. Performance of units fitted with the standard 2 row coil and operating against conventional boiler flow and return temperatures of 82/71°C and an air temperature of 18°C.

Size	Ci5			Ci6			Ci7			Ci8		
Speed	Low	Medium	High	Low	Medium	High	Low	Medium	High	Low	Medium	High
Airflow (m3/s)	0.23	0.35	0.46	0.40	0.60	0.79	0.55	0.81	1.10	0.85	1.26	1.69
Output (kW)	5.3	6.5	7.3	10.5	12.8	14.4	14.3	17.2	19.7	22.7	27.5	31.3
Water flow (kg/s)	0.06	0.08	0.09	0.13	0.15	0.17	0.17	0.21	0.24	0.27	0.33	0.37
Water pressure drop (kPa)	1.0	1.5	1.8	5.1	7.2	8.9	1.8	2.5	3.2	5.3	7.5	9.1

Table 4. Performance of units fitted with the standard 2 row coil and operating against conventional boiler flow and return temperatures of 80/60°C and an air temperature of 18°C.

Size	Ci5			Ci6			Ci7			Ci8		
Speed	Low	Medium	High	Low	Medium	High	Low	Medium	High	Low	Medium	High
Airflow (m3/s)	0.22	0.33	0.44	0.38	0.57	0.75	0.53	0.77	1.05	0.81	1.20	1.61
Output (kW)	8.6	10.8	12.4	15.8	20.0	23.0	23.0	28.6	33.7	34.1	42.7	49.7
Water flow (kg/s)	0.21	0.26	0.30	0.38	0.48	0.55	0.55	0.68	0.80	0.81	1.02	1.19
Water pressure drop (kPa)	4.3	6.5	8.5	18.4	27.9	36.2	42.6	62.6	83.6	20.1	30.9	41.0

Table 5. Performance of units fitted with the 3 row coil and operating against conventional boiler flow and return temperatures of 80/70°C and an air temperature of 18°C.

Size	Ci5			Ci6			Ci7			Ci8		
Speed	Low	Medium	High	Low	Medium	High	Low	Medium	High	Low	Medium	High
Airflow (m3/s)	0.22	0.33	0.44	0.38	0.57	0.75	0.53	0.77	1.05	0.81	1.20	1.61
Output (kW)	8.8	11.0	12.7	16.2	20.4	23.6	23.6	29.3	34.5	34.9	43.7	50.9
Water flow (kg/s)	0.19	0.24	0.28	0.35	0.44	0.51	0.51	0.64	0.75	0.76	0.95	1.10
Water pressure drop (kPa)	3.8	5.7	7.4	14.5	23.6	31.8	37.8	56.0	74.7	18.0	27.1	35.2

Table 6. Performance of units fitted with the 3 row coil and operating against conventional boiler flow and return temperatures of 82/71°C and an air temperature of 18°C.

S & P Coil Products Limited reserves the right to amend specification without any notice, whilst pursuing a policy of continual improvements in performance and design

Size	Ci5			Ci6			Ci7			Ci8		
Speed	Low	Medium	High	Low	Medium	High	Low	Medium	High	Low	Medium	High
Airflow (m3/s)	0.22	0.33	0.44	0.38	0.57	0.75	0.53	0.77	1.05	0.81	1.20	1.61
Output (kW)	6.8	8.7	10.0	13.7	17.1	19.5	20.3	25.0	29.3	29.6	36.7	42.4
Water flow (kg/s)	0.08	0.10	0.12	0.16	0.20	0.23	0.24	0.30	0.35	0.35	0.44	0.51
Water pressure drop (kPa)	0.8	1.1	1.6	4.1	5.6	7.2	10.0	14.6	19.3	4.3	6.7	8.7

Table 7. Performance of units fitted with the 3 row coil and operating against conventional boiler flow and return temperatures of 80/60°C and an air temperature of 18°C.

Size	Ci5*			Ci6			Ci7			Ci8		
Speed	Low	Medium	High	Low	Medium	High	Low	Medium	High	Low	Medium	High
Airflow (m3/s)	0.22	0.33	0.44	0.38	0.57	0.75	0.53	0.77	1.05	0.81	1.20	1.61
Output (kW)	3.4*	4.7*	5.6*	6.9	8.9	10.2	11.5	14.1	16.4	15.3	19.5	22.7
Water flow (kg/s)	0.05	0.07	0.09	0.08	0.11	0.12	0.14	0.17	0.20	0.18	0.23	0.27
Water pressure drop (kPa)	0.4	0.6	1.0	1.1	2.1	2.3	3.9	5.5	7.2	1.5	2.1	2.8

Table 8. Performance of units fitted with the 3 row coil and operating against flow and return temperatures of 60/40°C and an air temperature of 18°C.

*Ci5 at 60/45°C

Size	Ci5*			Ci6			Ci7			Ci8		
Speed	Low	Medium	High	Low	Medium	High	Low	Medium	High	Low	Medium	High
Airflow (m3/s)	0.21	0.31	0.42	0.36	0.54	0.71	0.51	0.73	1.00	0.77	1.14	1.53
Output (kW)	2.0*	5.3*	6.6*	7.8	10.4	12.3	13.4	16.8	19.8	21.4	27.0	31.6
Water flow (kg/s)	0.03	0.08	0.11	0.09	0.12	0.15	0.16	0.20	0.24	0.26	0.32	0.38
Water pressure drop (kPa)	0.1	0.6	1.0	0.9	1.6	2.4	3.2	4.6	6.2	9.2	14.1	18.4

Table 9. Performance of units fitted with the 4 row coil and operating against flow and return temperatures of 60/40°C and an air temperature of 18°C.

*Ci5 at 60/45°C

Size	Ci5*			Ci6			Ci7			Ci8		
Speed	Low	Medium	High	Low	Medium	High	Low	Medium	High	Low	Medium	High
Airflow (m3/s)	0.21	0.31	0.42	0.36	0.54	0.71	0.51	0.73	1.00	0.77	1.14	1.53
Output (kW)	4.0*	5.1*	6.0*	5.9	7.7	9.1	9.5	11.8	14.1	14.9	18.8	22.1
Water flow (kg/s)	0.19	0.24	0.29	0.14	0.18	0.22	0.23	0.28	0.34	0.36	0.45	0.53
Water pressure drop (kPa)	2.7	3.9	5.6	2.2	3.3	4.8	6.0	8.8	12.0	18.0	26.6	35.3

Table 10. Performance of units fitted with the 4 row coil and operating against flow and return temperatures of 45/35°C and an air temperature of 18°C.

*Ci5 at 45/40°C

The tables above give guidance regarding rates of heat output etc. at specific fluid conditions, please contact SPC if outputs at other conditions are required.

3.2 Electric Heated Units

A version of the Ci5 unit is available with a direct electric heating element rather than hot water coil. This is only available for horizontal mounting. The heating element is rated at 9kW (3 phase) and is available with a two speed medium/high switch.

Size	Ci5	
Supply	400V/3Ph/50Hz	
Speed	Medium	High
Airflow (m3/s)	0.35	0.46
Output (kW)	9.0	9.0
Max power draw/phase (kW)	3.1	3.2
Max current/phase (A)	13.5	13.9

Table 11. Ci5 electric heated unit

S & P Coil Products Limited reserves the right to amend specification without any notice, whilst pursuing a policy of continual improvements in performance and design

4 Mounting Height/Coverage

Unit heaters are intended to be mounted outside the occupied area of the conditioned space and to blow a jet of warm air into the area(s) where it is required. The performance and comfort levels achieved are a function of the positions in which the units are installed and in particular their heights above floor level. Higher fan speeds generate greater volumes of airflow and higher momentum jets which will cover greater areas. Smaller units are more suited to mounting in limited areas with reasonably low mounting heights while the larger units lend themselves to greater mounting heights covering greater floor areas. If units are selected with excess airflow then there will be greater than necessary levels of draught and noise.

The figures shown in the table below are for guidance/indication only and should not be considered inflexible. If the application falls close to the range indicated then satisfactory operation will result.

Size	Ci5			Ci6			Ci7			Ci8		
Speed	Low	Medium	High	Low	Medium	High	Low	Medium	High	Low	Medium	High
Minimum height (m)	2.0	2.5	2.5	2.5	2.5	3.0	2.5	3.0	3.0	2.5	3.0	3.5
Maximum height (m)	3.0	3.5	3.5	3.5	4.5	4.5	3.5	5.0	5.5	4.0	5.0	6.0
Throw (m)	7	9	13	10	13	19	13	16	25	15	18	27
Coverage (mxm)	6	7	12	9	12	18	11	13	23	12	15	25

Table 12. Recommended mounting heights

Throw represents the range of effectiveness of horizontal units mounted against a wall and blowing downwards at a 30 to 45° angle. If horizontal units are mounted along opposite walls it is helpful to stagger their positions to maximise and homogenise the field of effect. Coverage represents the corresponding area of effect for vertical units blowing downwards.

As mentioned, the figures in the above tables only provide guidance and coverage/throw is affected by mounting height, leaving air temperature and any special outlet louvre arrangements. Ideal leaving air temperatures for unit heaters are in the range of 30 to 45°C. Leaving air temperature is calculated in line with the equation below:

LAT(°C) = EAT(°C)+[Output(kW)/Airflow(m3/s)/1.2]

LAT = leaving air temperature, EAT = entering air temperature

5 Noise Data

Unit heaters are used to blow powerful jets of air from significant heights towards the floor. Accordingly, the high flowrates generate significant noise levels which are unsuitable for sensitive areas. When employed in typical factory/warehouse/storage facilities noise is rarely an issue and selection of units can be made on the basis of required outputs, mounting heights etc. Taking advantage of the controllability of EC motors the blades of the unit heater fans can be rotated at any speed from locked rotor to maximum and the noise generated will increase accordingly. If the application would benefit from a lower noise level then units running at low or medium speed should be selected as there are significant differences in the noise levels at the various speeds, as shown below.

Size	Ci5			Ci6			Ci7			Ci8		
Speed	Low	Medium	High	Low	Medium	High	Low	Medium	High	Low	Medium	High
dBA	41	47	57	41	50	60	43	52	62	48	54	66

Table 13. Noise levels

The sound pressure levels above are indicative and approximately equal to the free field levels 3m distant from the units. Actual sound pressure levels will depend on the reverberant nature of the installation.

6 Electrical Data

All hot water heated units are suitable for operation against a 230V/1Ph/50Hz supply. The power draw figures for the units at various speeds are shown below.

Size	Ci5			Ci6			Ci7			Ci8		
Speed	Low	Medium	High	Low	Medium	High	Low	Medium	High	Low	Medium	High
Power draw (W)	70	110	200	90	150	300	100	180	380	230	420	700

Table 14. Unit electrical power consumption

*See section 3.2 above for the electric heated unit which requires a 3 phase, 400V, 50Hz supply.

S & P Coil Products Limited reserves the right to amend specification without any notice, whilst pursuing a policy of continual improvements in performance and design

7 Configurations

7.1 Horizontal Mounting

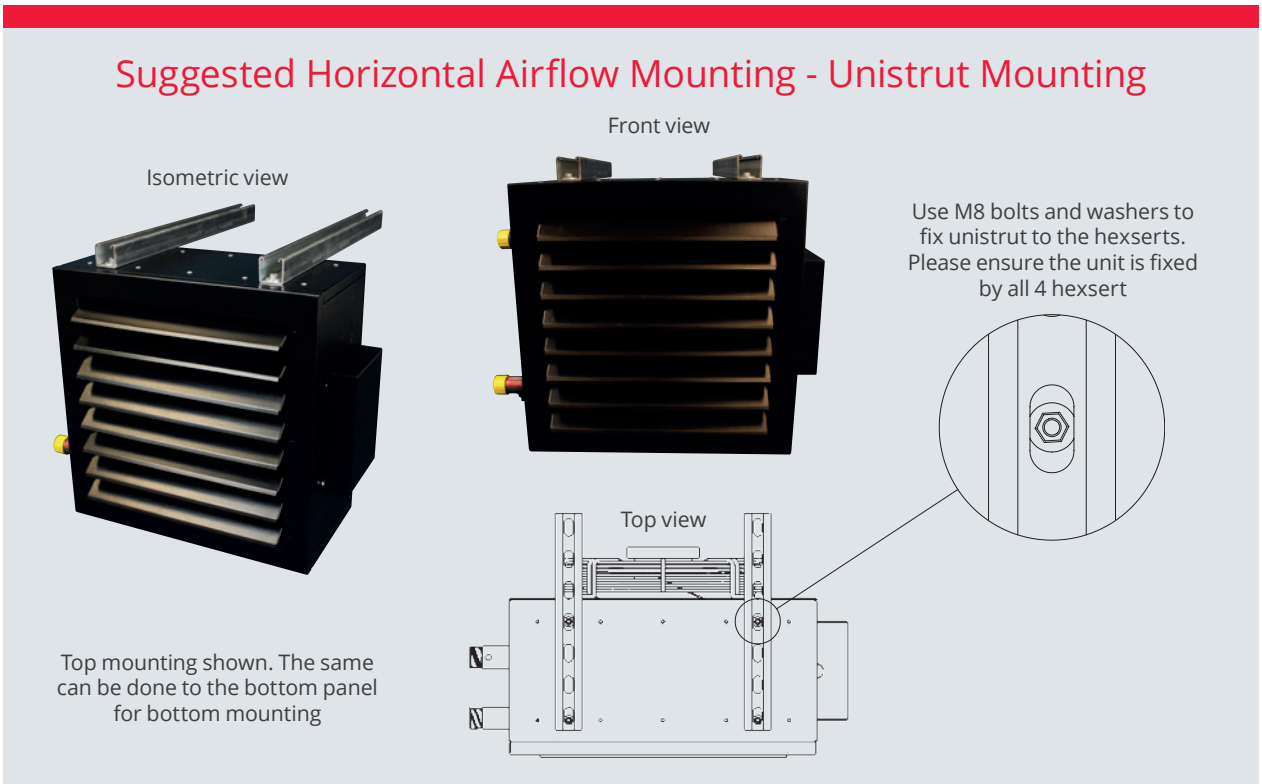

Figure 2. Horizontal unit unistrut mounting

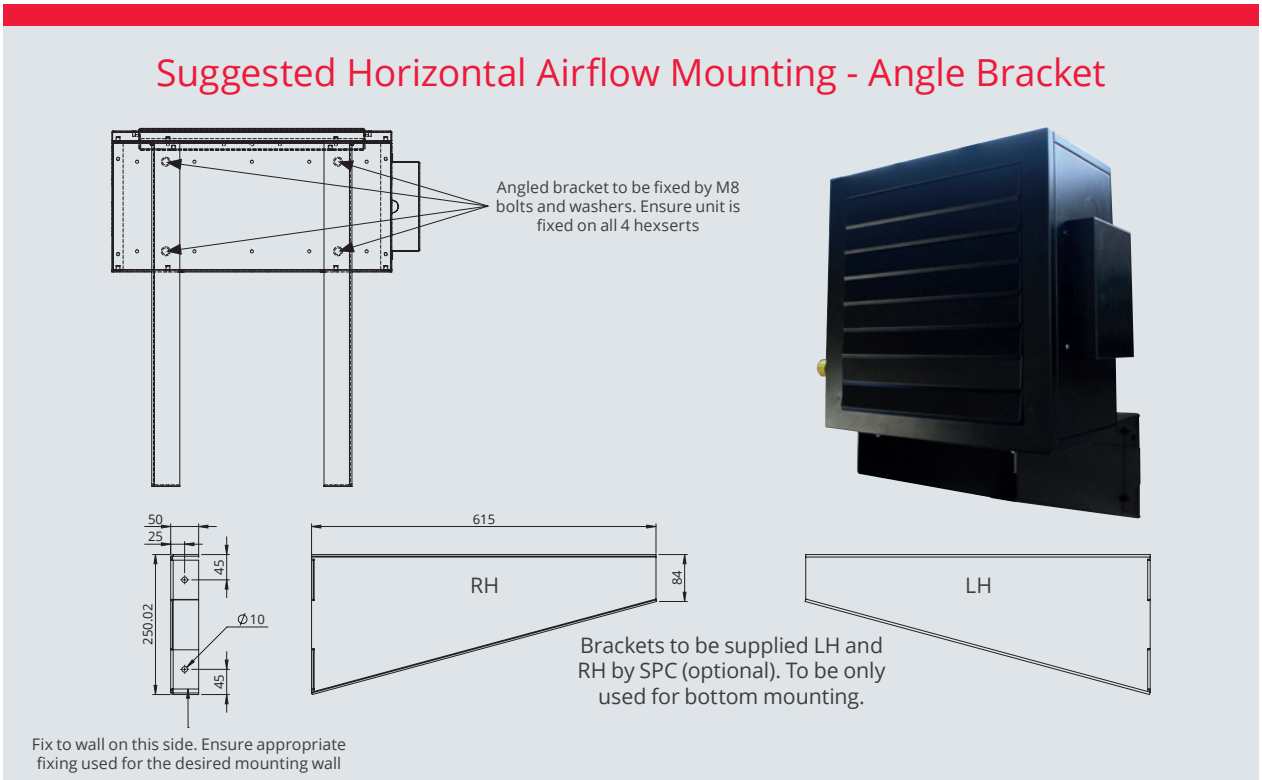

Figure 3. Horizontal unit wall bracket mounting

7.2 Vertical Mounting

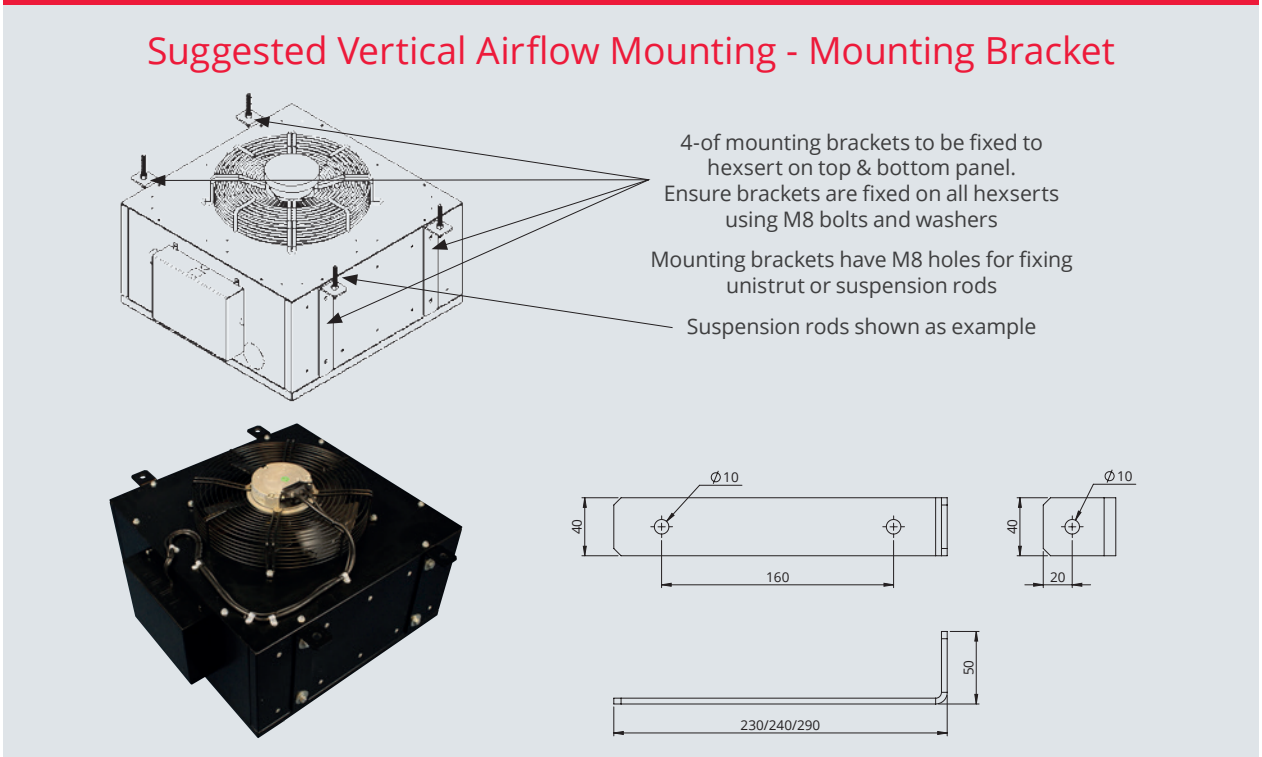

Figure 4. Vertical unit bracket and rod mounting

8 Accessories and Options

A number of options/accessories are available with the units. A list, which is not exhaustive, is given below but please contact SPC to discuss your particular requirements.

Casing/coil options:

- Various coils to suit LPHW temperatures
- 4-way diffuser (vertical models)
- Special paint finish (White or Black as standard)
- IP rated electrical boxes
- Various hanging brackets/solutions

S & P Coil Products Limited reserves the right to amend specification without any notice, whilst pursuing a policy of continual improvements in performance and design

9 Controls

Unit heaters can be controlled according to a number of regimes. The control components/hardware required will depend upon this methodology and the options are listed below (note that control options shown can be combined if appropriate):

- **Manual control** – least sophisticated and does not benefit from energy saving possibilities but is simple to use and understand. In this incarnation the unit heater would be controlled by an on/off rocker switch with the option for a change speed rocker switch. These switches would be wall-mounted, remote from the unit heater in an accessible position. They can be arranged to be fitted inside an IP rated box to suit harsh environments. It is not recommended that the speed of the fan in the unit heater be changed once it has been set as it should be set at a level appropriate to the mounting height. The change speed rocker switch can be built-in local to the unit to make it difficult to access and to prevent non-intentional modification.

- **Automatic local thermostatic control** – While thermostatic control is appropriate for unit heaters, airside control is not recommended. Reducing airflow will reduce heat output but will also reduce the throw/coverage of the unit and it is recommended that heat output rate is controlled on the waterside. Waterside control is achieved via the use of a 2 port modulating valve in the return or flow pipe to the unit heater. The setpoint temperature is set on a wall-mounted controller which sends a 0-10V signal to the modulating valve actuator; as the temperature approaches setpoint the valve moves in a closing direction. A 2 port modulating water valve package is available incorporating valve, actuator and wall-mounted controller. The controller can also send a signal to stop the fan from running when the temperature exceeds setpoint. The proportional control via a 0-10V signal provides the energy saving benefits not available with manual or staged heat control.

- **BMS (central) control** – If a central control system is available and monitors the appropriate control conditions then it can be used to automatically control the unit heater(s) without the need for local controllers. The BMS can directly enable/disable the unit and can also send a modulating 0-10V signal to the waterside valve to control heat output. If the option of using BACNET protocol is beneficial then the wall mounted controller available with the units can accept such signals and in turn control the position of water valves and switch the unit on/off.

- Master/slave arrangements should be chosen when multiple unit heaters are used in a single zone. The master unit is linked to the controls and sends a two-wire signal to the slave units to control their operation.
- Electric heated units will be controlled either manually, automatically or via BMS in an on/off fashion. They may be supplied with a speed switch but this will not change the rate of heat output.

S & P Coil Products Limited reserves the right to amend specification without any notice, whilst pursuing a policy of continual improvements in performance and design

10 Specification

Casing fabricated from heavy gauge mild steel with textured powder coated paint finish.

Horizontal units have front facing louvres fully adjustable. Vertical units have downward facing fully adjustable louvres. Louvres are painted to match the casing.

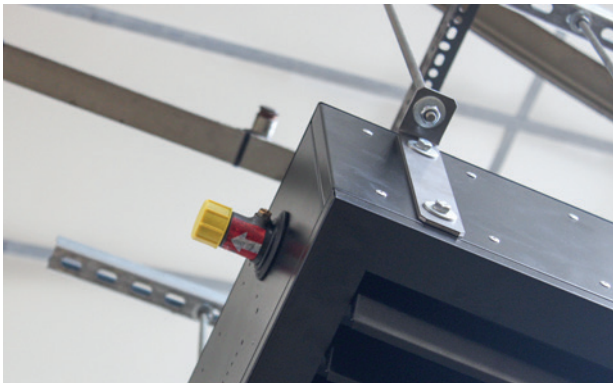

Motors are EC type with sealed for life bearings rated for continuous operation at up to 60°C. Supply is 230V/1Ph/50Hz for all units. Impellers are steel finished in black paint with a corresponding black basket guard attached to the rear of the unit. Motors/fans are continuously controllable via a 0-10V dc control signal.

The heat exchanger (coil) is constructed from copper tubes expanded into aluminium fins. Pipe connections terminate in mild steel male taper threaded BSP connections. Vent/drain points are included on the pipe connections. All heat exchangers are pressure tested (air under water) to a pressure of 22 bar. Heat exchangers for electric heated units incorporate an array of PTC ceramic self-regulating elements. Units are protected by a series of surface and air overheat switches.

SPC

PART OF THE CARVER GROUP

SPC House
Evington Valley Road
Leicester
LE5 5LU

T: 0116 249 0044
E: spc@spc-hvac.co.uk
spc-hvac.co.uk

MADE IN BRITAIN

ISO 9001 SGS UKAS MANAGEMENT SYSTEMS 0005