SPC Belgravia Supreme Fan Convector

Installation, Operation and Maintenance Instructions

IOM 70 Issue 6

SPC

Contents

		Page
1	General	3
1.1	Description	3
1.2	Receipt and Preparation	3
2	Installation	8
2.1	Removal of access panel	3
2.2	Removal of casing	3
2.3	Removing motor plate	4
2.4	Change of handing	4
2.5	Coil pipework connections	4
2.6	Wiring	4
2.7	Electric motor protection	5
2.8	Recommended connection / installation details	5
3	Electrical Information	6
3.1	Control wiring	6
3.2	Motor wiring	6
3.3	Common control options	6
3.4	Thermostatic operation	7
3.5	Extending Casing Controls	7
4	Maintenance	7
4.1	General	7
4.2	Filter	7
4.3	Coil	7
4.4	Fan Set	7
4.5	Fusing	8
4.6	Spares	8
5	Fault Finding	8
5.1	No fan operation	8
5.2	No Heating	8
6	Appendix	9
6.1	Standard Dimensions	9
6.2	Extended Casings	15
6.3	Supreme Plus	21
7	WEEE Directive	23
7.1	WEEE Marking	23
7.2	Information for Customers	23

1. General

1.1 Description

This manual covers the Belgravia Supreme Fan Convector range. These are cabinet type units intended for either vertical or horizontal mounting. Controls can be contained within the casing to give a clean outline or be installed remotely (on-site by the contractor) for easy customer control.

1.2 Receipt and preparation

The units are wrapped and display the SPC works order number, model reference, site reference (where appropriate), handing and site details. Installation, operation and maintenance instructions, together with wiring and any special instructions, are supplied with the unit.

On receipt, check that all details are correct to the customer schedules prior to opening packaging.

Damage should be reported to the carrier and to SPC office immediately.

It is recommended that packaging is kept in place and the units stored in a safe area until the necessary services are completed, in order to avoid the possibility of damage on site.

2. Installation

2.1 Removal of access panel

Two methods of fixing access panels are employed:

1 Tamper-proof fixings (TAP on order paperwork). Where supplied, these are released with a quarter turn using the Allen Key provided.

2 Lock Fixings (LAP on order paperwork). Where supplied, these are released with a quarter turn using the key supplied.

2.2 Removal of casing

WARNING! ELECTRICALLY ISOLATE THE UNIT PRIOR TO WORK COMMENCING

1 Remove front access panel as above.

2 Undo the two or four off M6 screws that are located internally, top and bottom in the back plate side faces.

3 Un-hook casing at top of the unit and pull clear of the back-plate assembly.

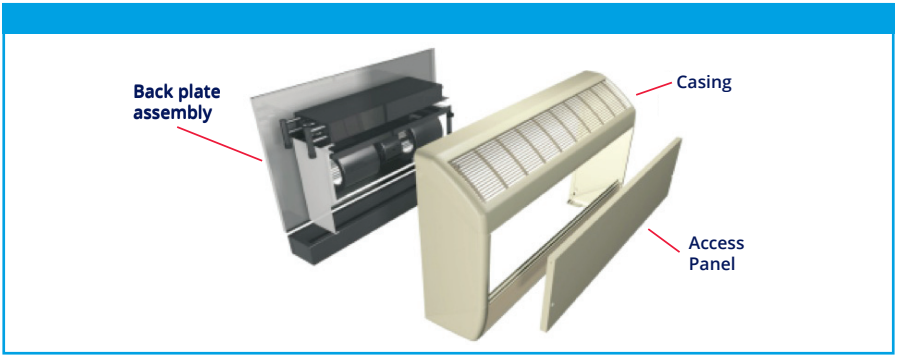

2.3 Removing Motor Plate

WARNING! ELECTRICALLY ISOLATE THE UNIT PRIOR TO WORK COMMENCING

1 Remove front access panel (see above).

2 Remove the two transit bolts that pass through the motor-plate at the front corners.

3 Disconnect plug/socket connections from the motor plate.

4 For normal air flow units, lift the motor plate up and clear of the casing as it is drawn out of the front opening. For RAF (Reverse Air flow) units, the motor plate bracket needs to be released at the front and swung down such that the motor plate can drop out through the front opening. In both instances take care not to damage the fan impellers in any way during this procedure.

5 On ceiling mounted units, ensure that the motor plate is adequately supported before releasing the transit bolts.

2.4 Change of Handing

Unless otherwise specified, all standard units will be supplied with heat exchangers having connections on the right-hand side when viewed from the front. It is possible to reverse this handing on-site (see instructions overleaf).

1 Remove the casing (as above).

2 Remove the coil by undoing two M6 bolts.

3 Disconnect the in-line wiring plugs that are situated between the motor plate and the coil and remove the motor plate (as above).

4 Remove the control plate by undoing the two M5 bolts that hold it in place.

5 Unscrew the connection blanking plate to allow the plugs to pass through the void bracket.

6 Replace the connection blanking plate in'closed position'.

7 On other void bracket unscrew the connection blanking plate and pass the plugs back through.

8 Attach the control plate to the other side of the unit. Re-fit the motor plate and re- connect plugs on top of the motor plate (any internal thermostats will need to be moved to the other side as well).

9 Rotate the coil and re-fix in required position (this must be on the opposite end to the control plate) with M6 bolts.

2.5 Coil Pipework Connection

It is recommended that pipe work connections should be run through a plinth where possible. If this is not possible, or if the unit has not been supplied with a plinth, then the unit should have modified case side panels where the knock-outs can be removed to make the coil connections.

Should these panels not have been specified, or pipe connections need to enter the unit from the top or bottom, then holes will need to be cut through the case metalwork or aluminium extrusions such that the external casing will still lift on and off after installation.

For ceiling mounted units connections should be made through the back panel with appropriate sized holes being made to accommodate the connection pipes.

2.6 Wiring

All electrical work should be carried out in accordance with current I.E.T. regulations.

All motors are fitted with internal, self-resetting thermal overload protection (see note below). All units are equipped with a motor plate mounted 20mmx5mm antisurge fuse (see spare slist). All units areequipped with 2 metre length of flying lead. This is normally coiled within the unit.

The customer should drill and gland through the back plate (or plinth if fitted) to suit the installation.

2.7 Electric Motor Protection

On ceiling mounted and reverse airflow applications where the fan motor is switched off for long periods, with hot water still circulating through the heat exchangers in excess of 82oC (180oF), it is recommended that a system be employed which automatically closes the hot water supply valve to prevent damage to the electric motor due to overheating.

2.8 Recommended connection/installation details

STANDARD ORIENTATION

A **A/P** **BS** **BS/P** **HS**

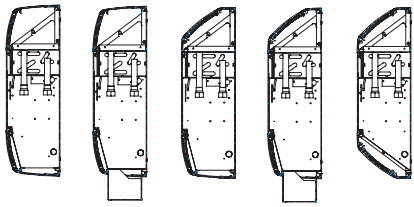

RAF ORIENTATION

A/RAF **A/RAF/P** **BS/RAF** **BS/RAF/P** **HS/RAF**

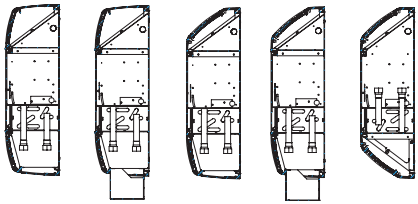

Connections through knock-outs in bottom panel or through the plinth
Connections through back or side panel for HS & HS/RAF

INVERTED CASE ORIENTATION

BS/INVCS **BS/INVCS/RAF**

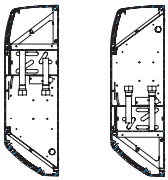

HORIZONTAL ORIENTATION

QS **VS**

QS/RAF **VS/RAF**

Drill through back panel to make connections

Connections through knock-outs in top panel on BS/INVCS/RAF

Connection Options:

1. **Drill through side panel casework and case becomes fixed after installation (maintenance can still be achieved through removal of front panel).**
2. **Request slotted knock-out side panels on units when placing order with SPC.**

PIPE CONNECTIONS 3/4" BSP ON ALL MODELS 1/2" ON LOWFLOW HEAT EXCHANGERS

3. Electrical Information

Unit	Speed	Airflow (L/S)	EC Power Draw (W)	EC SFP (W/L/S)
Bel 40	L M H	89 112 140	11 16 27	0.12 0.14 0.19
Bel 60	L M H	108 184 223	15 53 84	0.14 0.29 0.38
Bel 90	L M H	120 231 317	18 34 73	0.15 0.15 0.23
Bel 150	L M H	180 289 329	22 58 80	0.12 0.20 0.24

3.1 Control Wiring

The wiring for internal control options is sited on the motor plate. Wiring from the motor plate to casing control options is via split connector break plugs.

Customer wiring should be made to the Customer Connection Box for other than the flying lead. Wiring to other than this point may result in voiding of the warranty.

A wiring diagram showing customer connections is included with each unit.

For wiring other than that specified on the customer's order, the SPC technical department should be contacted.

3.2 Motor Wiring

The motors are EC/DC type. They have a 230V AC supply but are controlled via a 0 to 10V DC signal. A circuit board on the motor plate has three potentiometers fitted which give the low/normal/high speed. If only one speed is specified this will be normal unless otherwise stated.

3.3 Common Control Options

	Reference**	Function
Thermostat	T1	On - off
	T2	Change speed
	LTC	Low water temperature fan cutout
Switches	RS1	On - off
	RS2	Summer - winter
	RS3	Change speed (3 speeds)

**Additional References: Motor plate mounted = B, Case mounted = C, Remote = R

3.4 Thermostatic Operation

The T1 and T2 Thermostats both have graduated scales to cover their range of operation. Since the thermostatic bulb is frequently unit mounted it may be offset by various amounts from the measured room temperature.

Set the knob at mid-range and adjust to suit comfort conditions within the room.

The range corresponds to a sensed temperature range of 10°C to 30°C.

T1 and T2 are adjustable and determine the comfort room temperature range. T2 must be set below T1 Example: T2 = 16°C and T1 = 20°C.

The LTC (Low temperature cutout) is not adjustable it is set to approx 35°C and provides a fan cut-off for the situation when the water temperature is not sufficiently high to provide warm blown air from the fan convector. The LTC is mounted at the non-void end of the unit, and is fitted to a copper disc which is brazed onto a return bend of the coil.

Adjustable low temerature cutouts (ALTC) can be supplied but these are fitted on the pipework rather than the internal coil heat exchanger.

3.5 Extending Casing Controls

Belgravia Fan Convectors are available with extended casings for occasions when it is important to incorporate valves within the extent of the unit.

An extended casing shares its width with the next size up in the standard range of units. Valves can be specified and supplied by the user or are available from SPC. SPC units can be wired such that waterside valves close whenever the sensed room air temperature exceeds setpoint.

If supplied by SPC, then valves and corresponding actuators are supplied loose for on-site fitting. The valves can be arranged to close in response to a standard on/off thermostat or can be integrated with the SPC Modulo v3 proportional controller.

4. Maintenance

4.1 General

WARNING! ELECTRICALLY ISOLATE THE UNIT PRIOR TO WORK COMMENCING

4.2 Filter

The AF3 air filter is motor plate mounted as standard. The filter is held in place between 2 brackets and is removed by sliding it out.

Filters should be gently tapped to remove most of the accumulated dust and either vacuumed clean or washed in lukewarm water with detergent. Rinse in clean water and allow to dry naturally before replacement.

4.3 Coil

Remove access panel and clean the coil with a brush or by vacuuming, taking care not to damage the coil surfaces.

4.4 Fan Set

The motor has sealed for life bearings, which under normal circumstances require no user maintenance. The motor deck is accessed by means of the access panel and is readily removed if required. Occasional vacuuming or cleaning of the motor plate is recommended.

4.5 Fusing

Fan motor - Anti-surge 20mm x 5mm 2A to BS4265/ IEC127.

4.6 Spares

Fuses - As above.

Filters - Quote model number (SPR 40/60 etc) or unit width. Quote motor plate mounted (AF3).

Controls - As specification. Quote wiring diagram. number or marked number if possible.

Motor - Quote model number on motor plate.

5. Fault Finding

5.1 No Fan Operation

1 Check fuse on motor plate
2 Check power supply to unit
3 Check loose wiring and breaker plugs or damage to wiring
4 Check switches
5 Check impellers run freely
6 Check LTC contact on pipe-work or return bend
7 Check hot water to unit or bypass LTC
8 Check valve wiring for fan operation

5.2 No Heating

1 Check thermostat operation (change set point to maximum) where fitted
2 Check integrity of wiring
3 Check coil vented
4 Check hot water to unit
5 Check thermostat bulb in airstream

6. Appendix

6.1 Standard Dimensions

Dimensions are the same on all styles

Supreme A

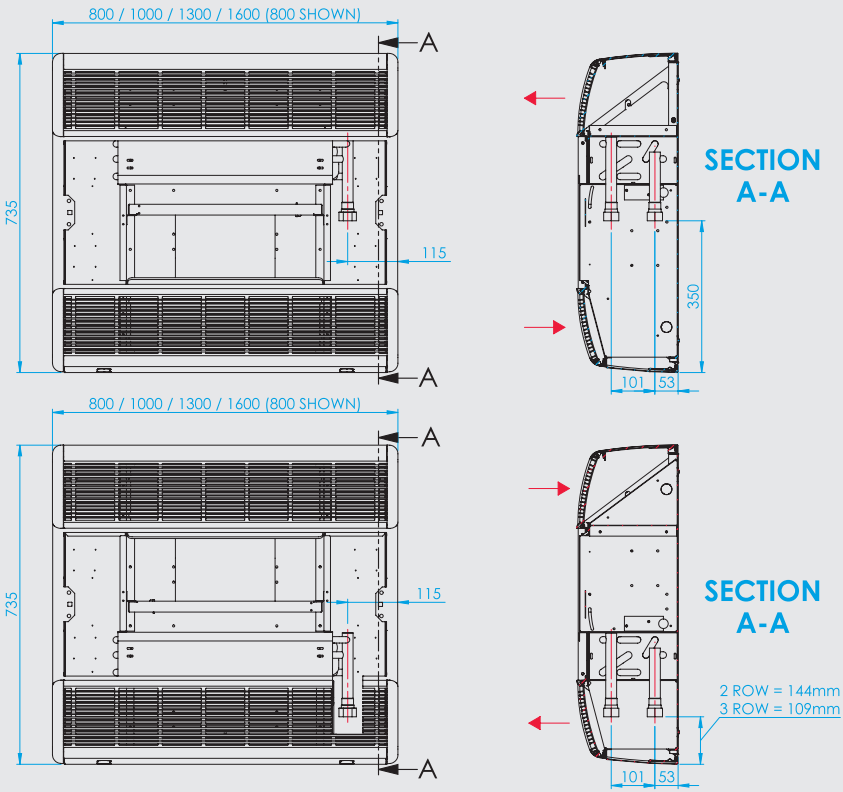

Supreme A/RAF

Unit Size	SPR40A	SPR60A	SPR90A	SPR150A
Case Length (mm)	800	1000	1300	1600
Height (mm)	735			
Depth (mm)	235			

Units shown with rh connections, dimensions same with lh connections. Connections through knock-outs in bottom panel or through plinth. Plinth not shown.

Pipe connections 3/4" BSP on all models 1/2" on lowflow heat exchangers.

Front Panel removed.

Supreme BS

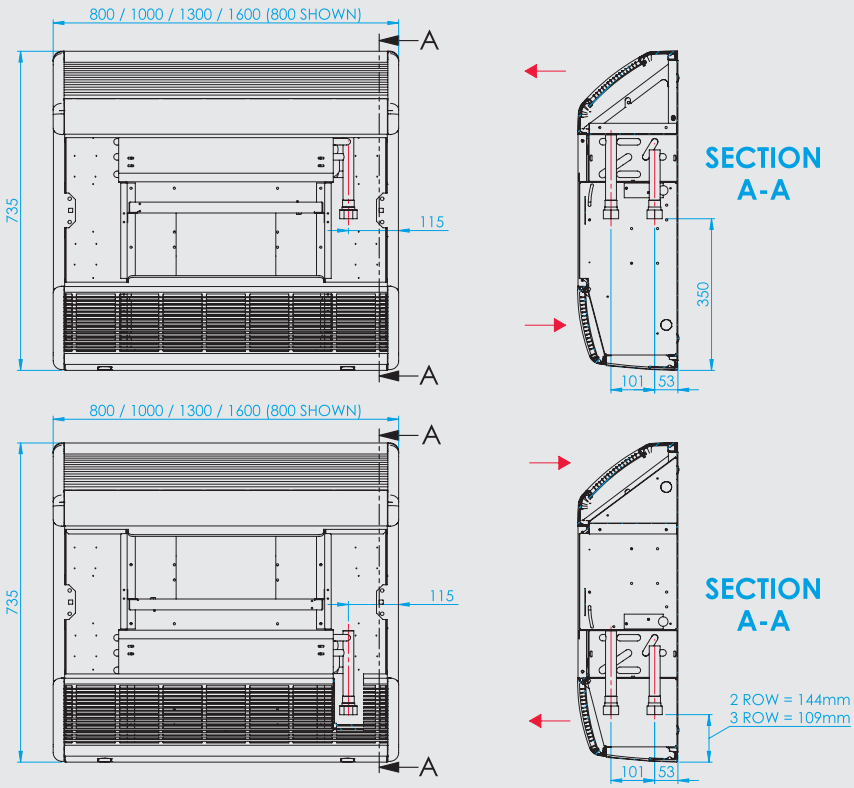

Supreme BS/RAF

Unit Size	SPR40BS	SPR60BS	SPR90BS	SPR150BS
Case Length (mm)	800	1000	1300	1600
Height (mm)	735			
Depth (mm)	235			

Units shown with rh connections, dimensions same with lh connections. Connections through knock-outs in bottom panel or through plinth. Plinth not shown.

Pipe connections 3/4" BSP on all models 1/2" on lowflow heat exchangers.

Front Panel removed.

Supreme BS/INVCS

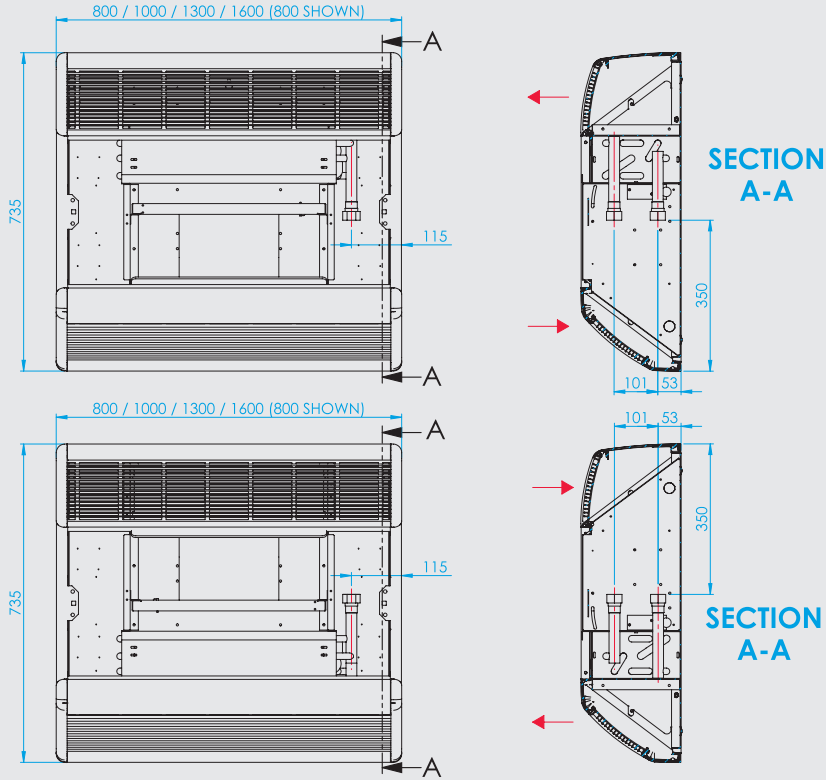

Supreme BS/INVCS/RAF

Unit Size	SPR40BS	SPR60BS	SPR90BS	SPR150BS
Case Length (mm)	800	1000	1300	1600
Height (mm)	735			
Depth (mm)	235			

Units shown with rh connections, dimensions same with lh connections. Connections through side or back panel on BS/INVCS. Through knock-outs in top panel on BS/INVCS/RAF.

Pipe connections 3/4" BSP on all models 1/2" on lowflow heat exchangers.

Front Panel removed.

Supreme HS

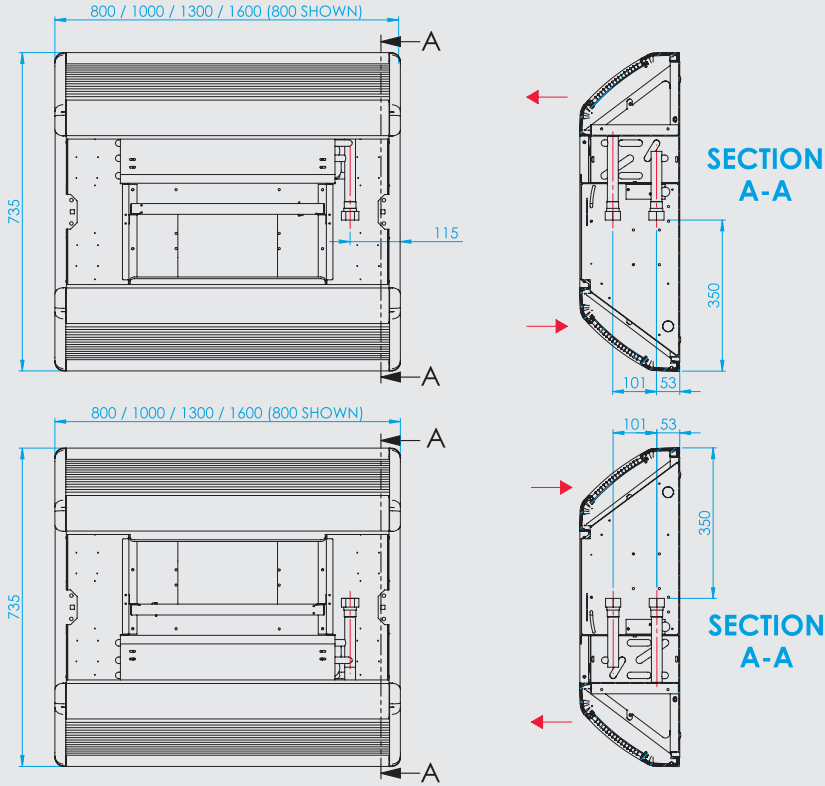

Supreme HS/RAF

Unit Size	SPR40HS	SPR60HS	SPR90HS	SPR150HS
Case Length (mm)	800	1000	1300	1600
Height (mm)	735			
Depth (mm)	235			

Units shown with rh connections, dimensions same with lh connections. Connections through side or back panel.

Pipe connections 3/4" BSP on all models 1/2" on lowflow heat exchangers.

Front Panel removed.

Supreme QS

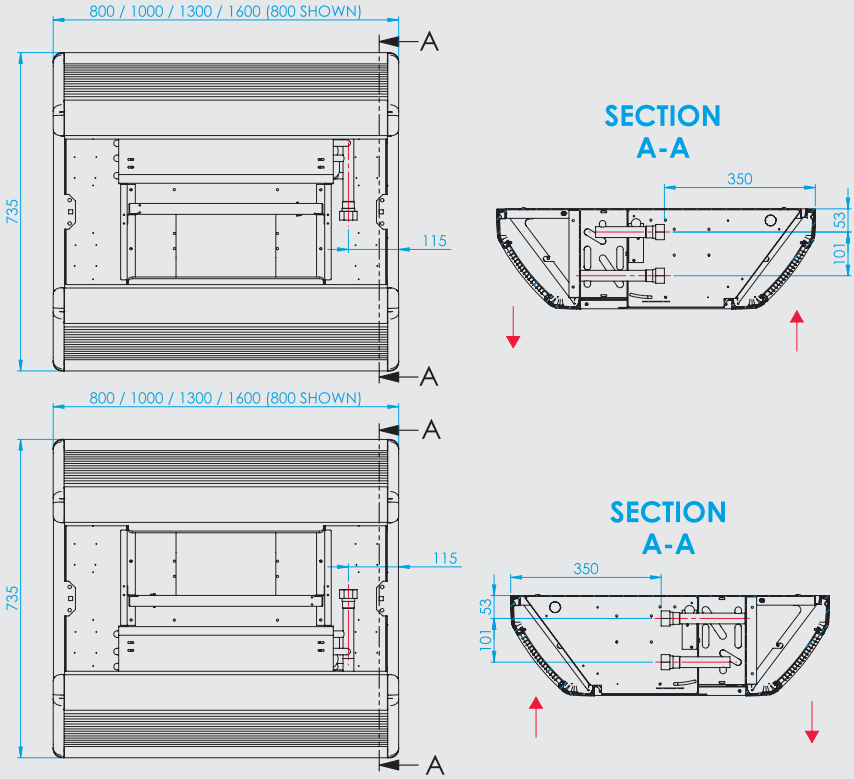

Supreme QS/RAF

Unit Size	SPR40QS	SPR60QS	SPR90QS	SPR150QS
Case Length (mm)	800	1000	1300	1600
Height (mm)	735			
Depth (mm)	235			

Units shown with rh connections, dimensions same with lh connections. Connections through side or back panel.

Pipe connections 3/4" BSP on all models 1/2" on lowflow heat exchangers.

Front Panel removed.

Supreme VS

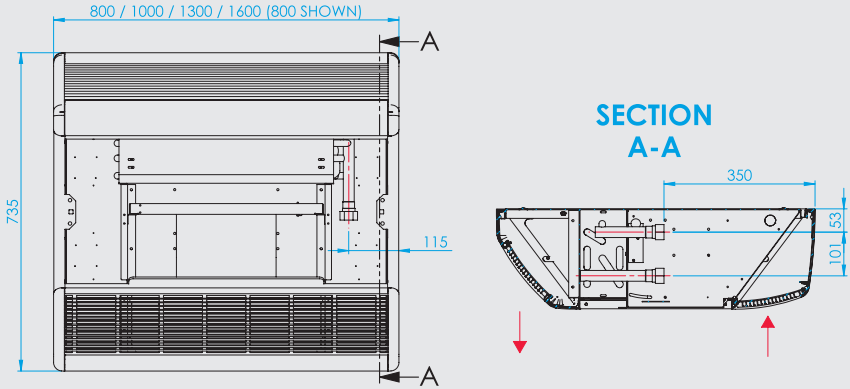

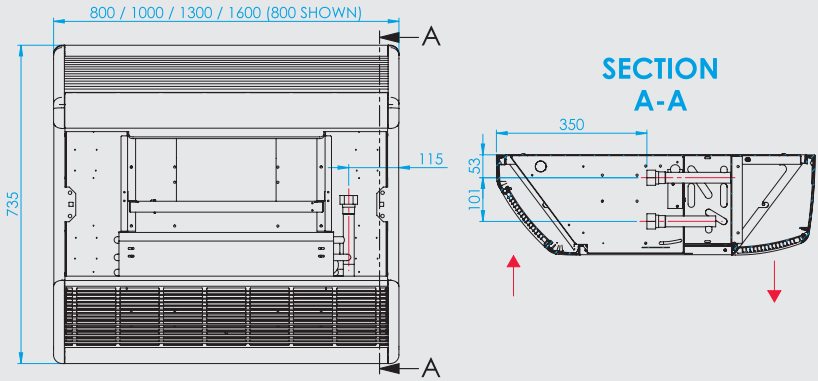

Supreme VS/RAF

Unit Size	SPR40VS	SPR60VS	SPR90VS	SPR150VS
Case Length (mm)	800	1000	1300	1600
Height (mm)	735			
Depth (mm)	235			

Units shown with rh connections, dimensions same with lh connections. Connections through side or back panel.

Pipe connections 3/4" BSP on all models 1/2" on lowflow heat exchangers.

Front Panel removed.

6.2 Extended Casings

Supreme A + EXT

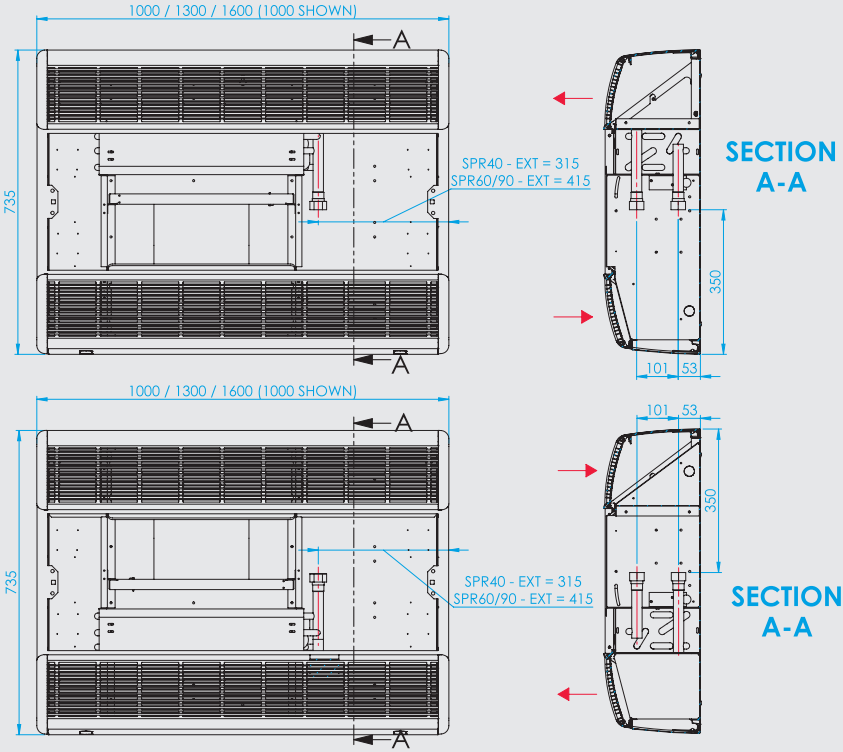

Supreme A/RAF + EXT

Unit Size	SPR40A	SPR60A	SPR90A
Case Length (mm)	1000	1300	1600
Height (mm)		735	
Depth (mm)		235	

Units shown with rh connections, dimensions same with lh connections. Connections through knock-outs in bottom panel or through plinth. Plinth not shown.

Pipe connections 3/4" BSP on all models 1/2" on lowflow heat exchangers.

Front Panel removed.

Supreme BS + EXT

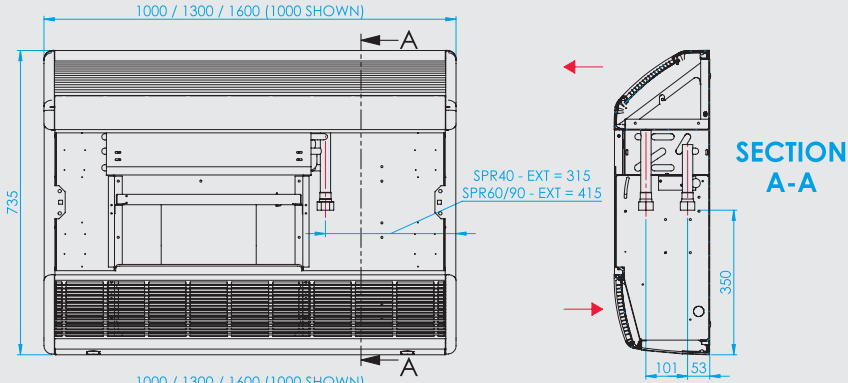

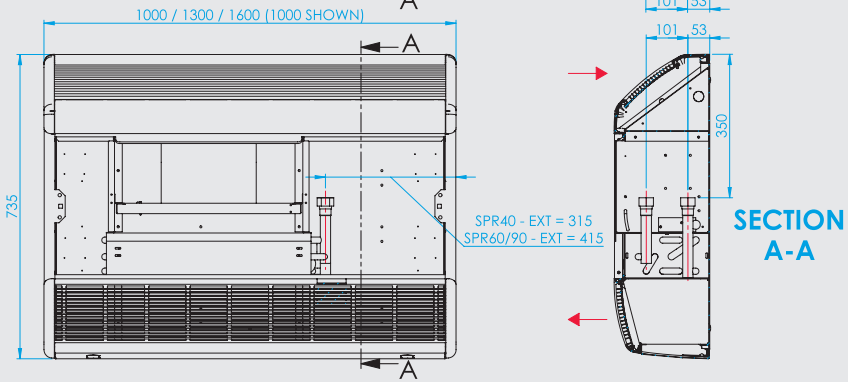

Supreme BS/RAF + EXT

Unit Size	SPR40BS	SPR60BS	SPR90BS
Case Length (mm)	1000	1300	1600
Height (mm)		735	
Depth (mm)		235	

Units shown with rh connections, dimensions same with lh connections. Connections through knock-outs in bottom panel or through plinth. Plinth not shown.

Pipe connections 3/4" BSP on all models 1/2" on lowflow heat exchangers.

Front Panel removed.

Supreme BS/INVCS + EXT

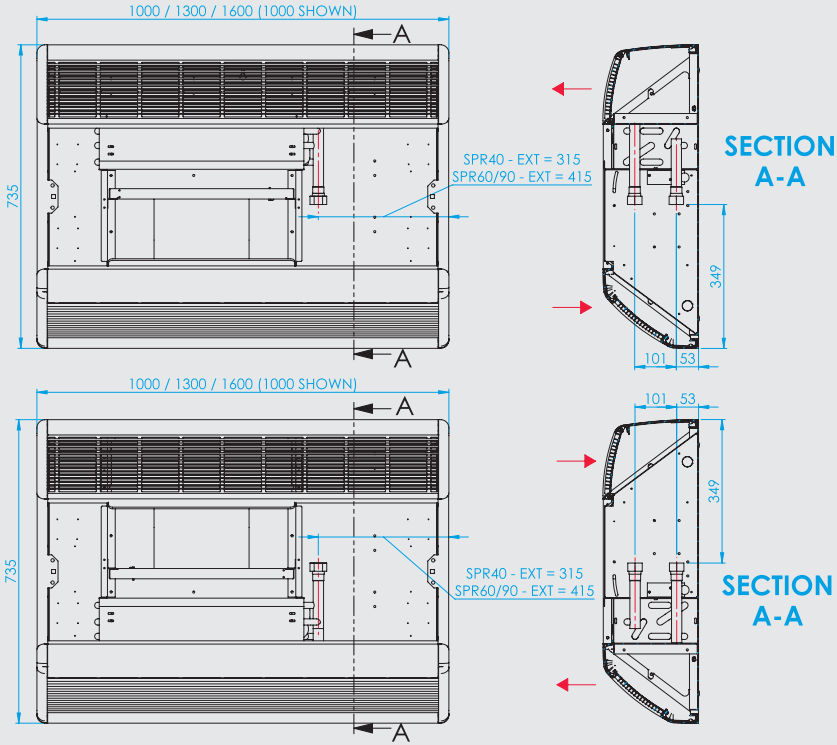

Supreme BS/INVCS/RAF + EXT

Unit Size	SPR40BS	SPR60BS	SPR90BS
Case Length (mm)	1000	1300	1600
Height (mm)		735	
Depth (mm)		235	

Units shown with rh connections, dimensions same with lh connections. Connections through side or back panel on BS/INVCS. Through knock-outs in top panel on BS/INVCS/RAF.

Pipe connections 3/4" BSP on all models 1/2" on lowflow heat exchangers.

Front Panel removed.

Supreme HS + EXT

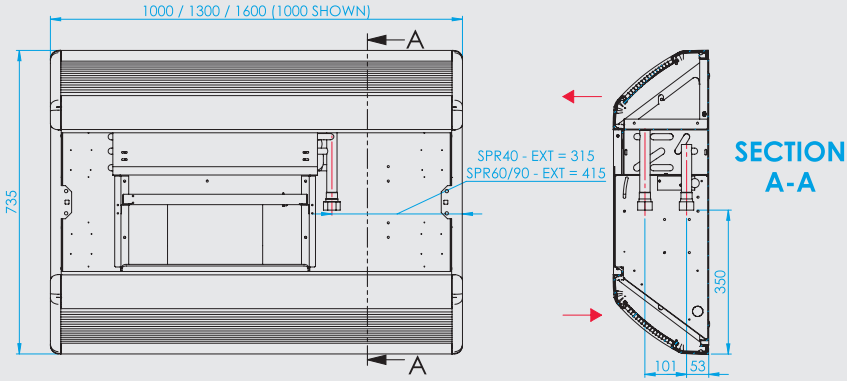

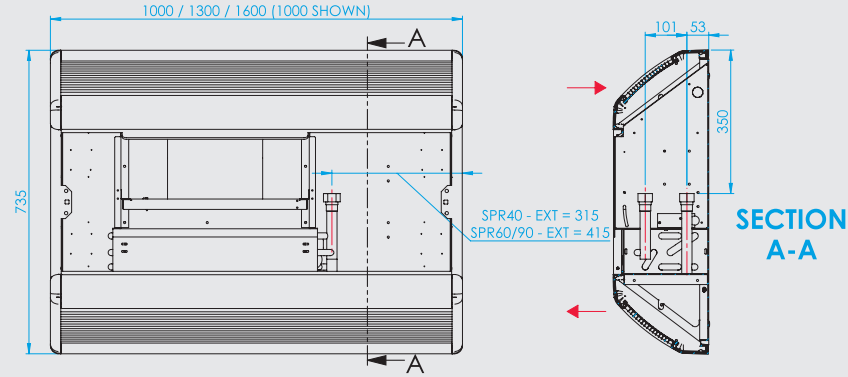

Supreme HS/RAF + EXT

Unit Size	SPR40HS	SPR60HS	SPR90HS
Case Length (mm)	1000	1300	1600
Height (mm)		735	
Depth (mm)		235	

Units shown with rh connections, dimensions same with lh connections. Connections through side or back panel.

Pipe connections 3/4" BSP on all models 1/2" on lowflow heat exchangers.

Front Panel removed.

Supreme QS + EXT

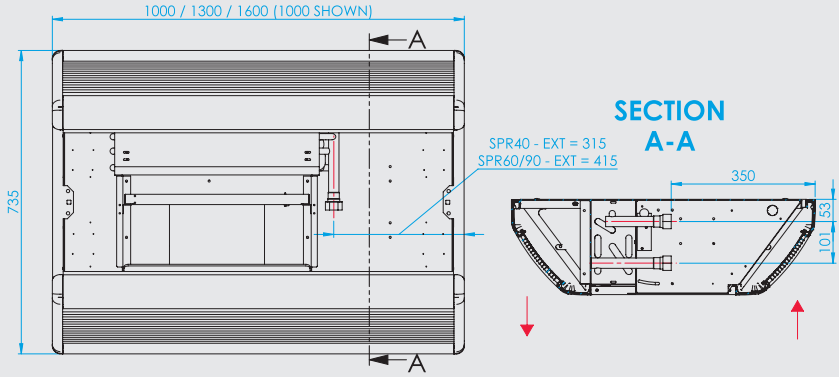

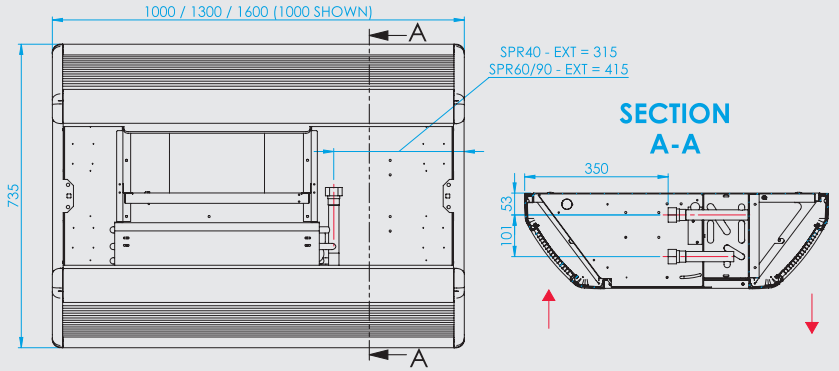

Supreme QS/RAF + EXT

Unit Size	SPR40QS	SPR60QS	SPR90QS
Case Length (mm)	1000	1300	1600
Height (mm)		735	
Depth (mm)		235	

Units shown with rh connections, dimensions same with lh connections. Connections through side or back panel.

Pipe connections 3/4" BSP on all models 1/2" on lowflow heat exchangers.

Front Panel removed.

Supreme VS + EXT

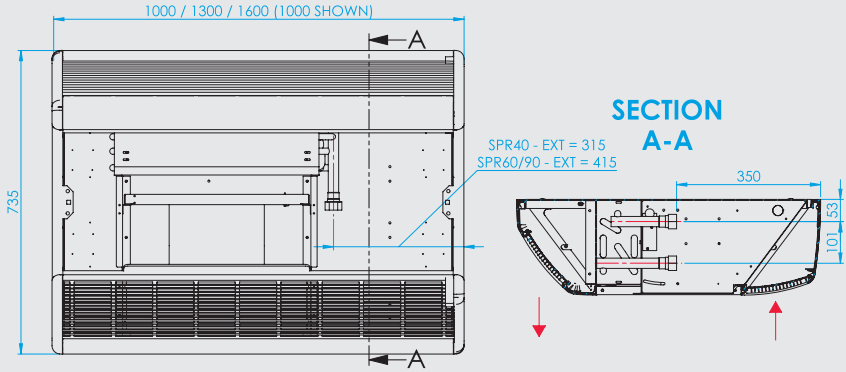

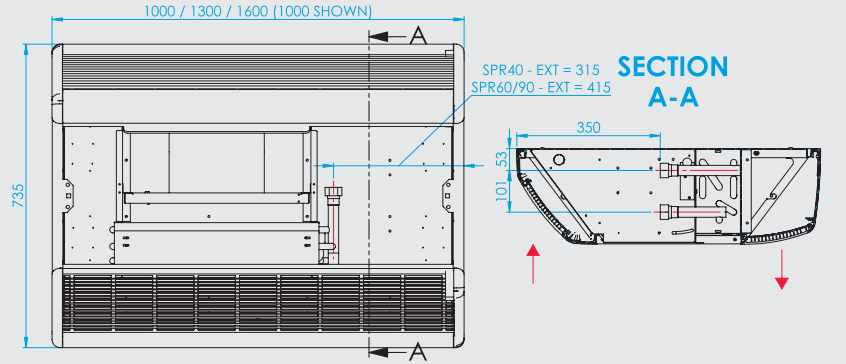

Supreme VS/RAF + EXT

Unit Size	SPR40VS	SPR60VS	SPR90VS
Case Length (mm)	1000	1300	1600
Height (mm)		735	
Depth (mm)		235	

Units shown with rh connections, dimensions same with lh connections. Connections through side or back panel.

Pipe connections 3/4" BSP on all models 1/2" on lowflow heat exchangers.

Front Panel removed.

6.3 Supreme Plus

Supreme Plus A Style

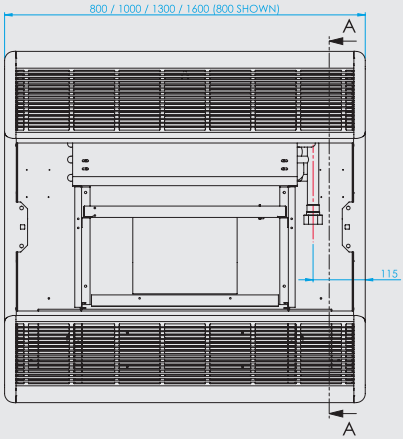

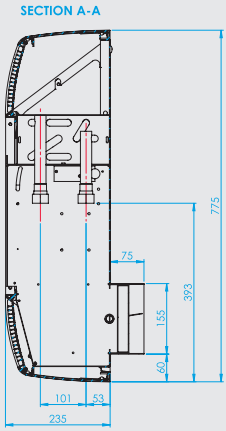

Pipe connections 3/4" bsp on standard and enhanced coils, 1/2" on lowflow coils

For back panel spigot dimensions see page 22.

Supreme Plus B Style

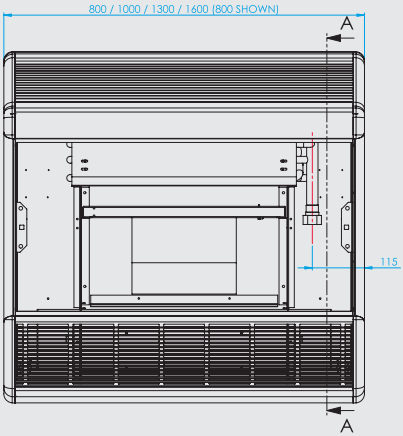

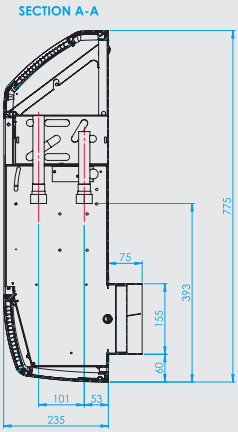

Pipe connections 3/4" bsp on standard and enhanced coils, 1/2" on lowflow coils

For back panel spigot dimensions see page 22.

Supreme Plus C Style

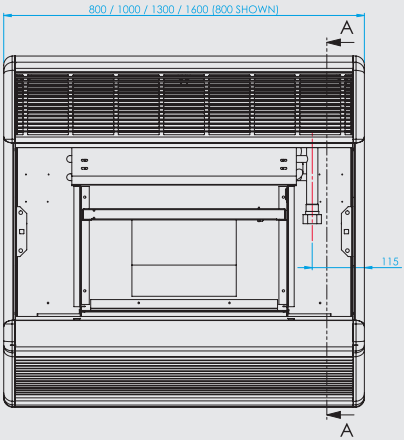

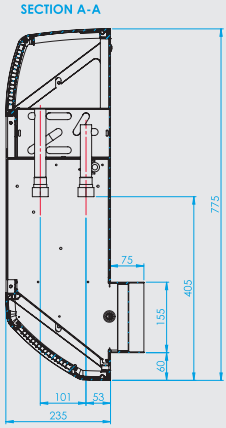

Pipe connections 3/4" bsp on standard and enhanced coils, 1/2" on lowflow coils

For back panel spigot dimensions see below.

Supreme Plus Back Panel Spigot Dims

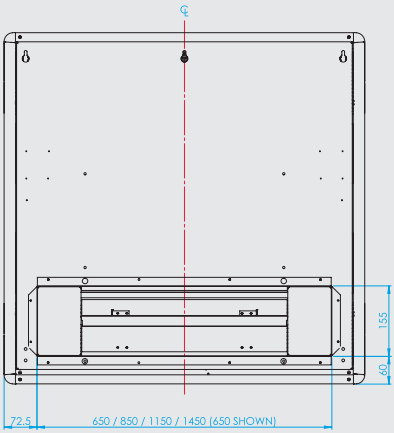

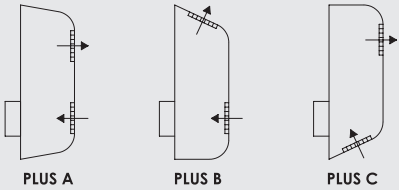

For all styles, the spigot is on the back panel on the Bottom of the unit. The spigot depth is 75mm. Dimensions Shown are the same across the range of models.

7. WEEE Directive

(Waste Electrical and Electronic Equipment)

7.1 WEEE Marking

All products that are subject to the WEEE Directive supplied by SPC from 2007 are compliant with the WEEE marking requirements. Such products are marked with the "crossed out wheelie bin" WEEE symbol shown here.

SPC WEEE Certificate No: WEE/KF0742YR

7.2 Information for Customers

According to the timelines and requirements of European Union member state WEEE legislation, the following customer information is provided for all SPC supplied products subject to the WEEE directive.

This symbol on the product or on its packaging indicates that the product must not be disposed of with normal household waste.

Instead, it is your responsibility to dispose of your waste equipment by arranging to return it to a designated collection point for the recycling of waste electrical and electronic equipment. By separating and recycling your waste equipment at the time of disposal you will help to conserve natural resources and ensure that the equipment is recycled in a manner that protects human health and the environment. For more information about how to recycle your SPC supplied waste equipment for recycling, please contact our customer services department on +44 (0)1162490044 or customerservice@spc-hvac.co.uk.

PART OF THE CARVER GROUP

SPC House
Evington Valley Road
Leicester
LE5 5LU

T: 0116 249 0044
E: spc@spc-hvac.co.uk
spc-hvac.co.uk