SPC Belgravia Classic Fan Convector

Installation, Operation & Maintenance Manual

IOM 69 Issue 7

SPC

Contents

		Page
1	General 3	
1.1	Description	3
1.2	Receipt and Preparation	3
2	Installation	4
2.1	Removal of Access Panel	4
2.2	Transit Protection	4
2.3	Removing Motor Plate	5
2.4	Change of Handing	6
2.5	Mounting	6
2.5.1	Wall Mounting	6
2.5.2	Ceiling Mounting	7
2.5.3	Tall Units	8
2.6	Wiring	9
2.7	Electric Motor Protection	9
2.8	Pipe connections	9
3	Electrical Data	10
3.1	Control Wiring	10
3.2	Motor Wiring	10
3.3	Common Control Options	11
3.4	Thermostatic Operation	11
3.5	Switch Operation	11
3.6	Extending Casing Controls	11
4	Maintenance	12
4.1	General	12
4.2	Filter	12
4.3	Coil	12
4.4	Fan Set	12
4.5	Fusing	12
4.6	Spares	12
5	Fault Finding	13
5.1	No Fan Operation	13
5.2	No Heating	13
6	Appendix	14
6.1	Standard Dimensions	14
6.2	Extended Casings	22
7	Waste Electrical and Electronic Equipment (WEEE) Directive	29
7.1	WEEE Marking	29
7.2	Information for Customers	29

1. General

1.1 Description

This manual covers the 'Classic' and 'Natural' models of the Belgravia Fan Convector range. 'Classic' units are the cabinet type intended for either vertical or horizontal mounting. 'Natural' models are free convection units for vertical mounting. Controls can be contained within the casing to give a clean outline.

The units can be supplied with internal grilles for visible surface mounting types or with plenum and/or spigot connections for concealed mounting in ceiling or wall space, when short duct connections may be required to serve the heated space via optional loose grille assemblies.

The 'Natural' unit possesses no motor plate as it relies upon buoyancy driven airflow through the casing. The following sections relating to the motor plate and its associated controls do not apply to this type of unit.

1.2 Receipt and Preparation

The units are wrapped and display the SPC works order number, model reference, site reference (where appropriate), handing and site details. Installation, operation and maintenance instructions, together with wiring and any special instructions are supplied with the unit.

On receipt, check that all details are correct to the Customer Schedules prior to opening packaging.

Damage should be reported to the Carrier and to SPC Office immediately.

It is recommended that packaging is kept in place and the units stored in a safe area until the necessary services are completed, in order to avoid the possibility of damage on site.

This document and wiring diagram supplied should be kept with the unit until electrical installation is complete.

2. Installation

2.1 Removal of Access Panel

1. Tamperproof fixings (TAP) are the default method of fixing the access panel to the unit. This type of fixing requires unscrewing using an Allen key (provided). If security fixings are used then the screw head will include a pin and a special security Allen key is required for removal.
2. Lock fixings may be provided (LAP) and are released using the quarter turn keys supplied.

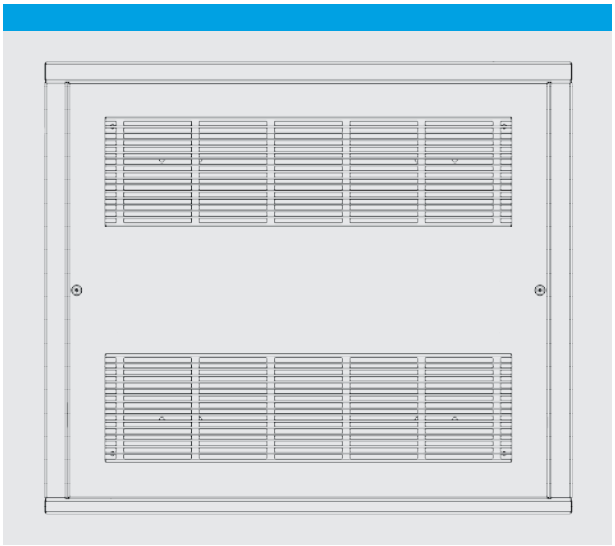

Position of TAP fixings

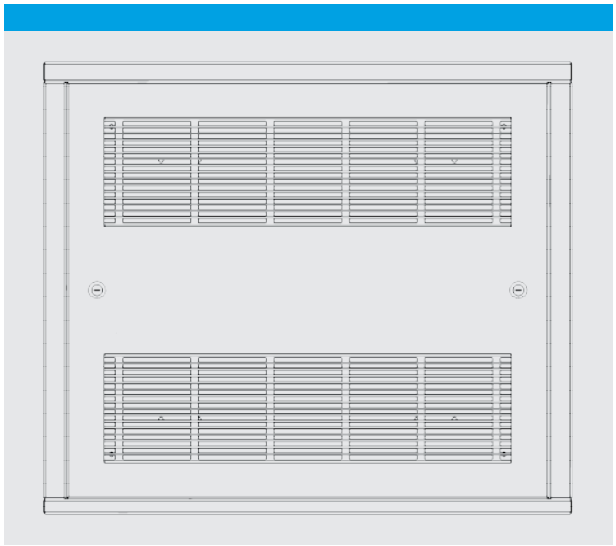

Position of LAP fixings

2.2 Transit Protection

If despatched with a Polystyrene block fitted between side wall & void bracket, this should be removed before installation.

2.3 Removing Motor Plate

IMPORTANT: isolate unit electrically at mains controls.

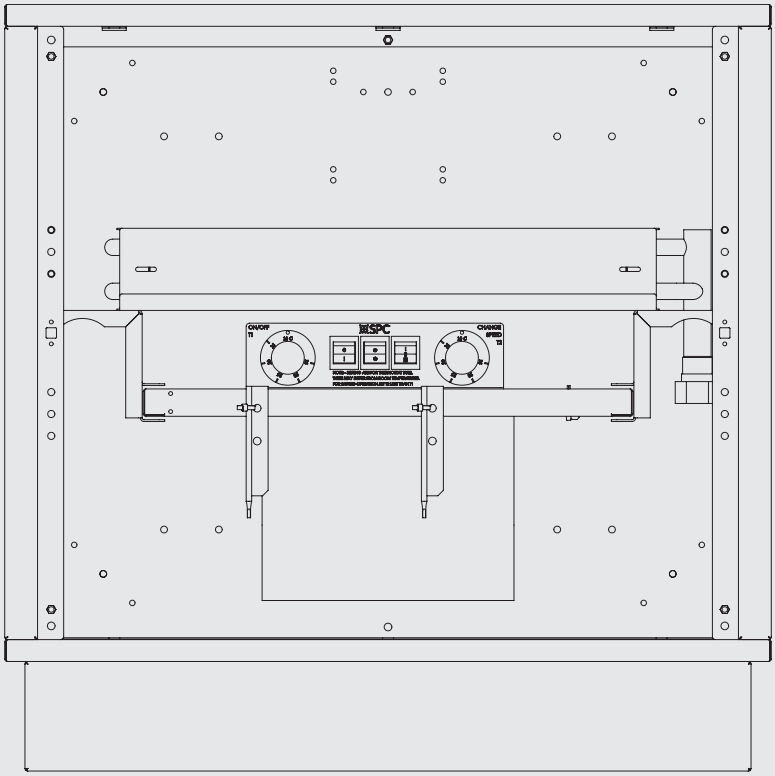

- Remove front access panel.
- Disconnect plug/socket connections from motor plate.
- Slide out motor plate, taking care not to damage fan impellers in any way during this procedure, or in the replacement.
- On ceiling mounted applications, the motor plate is retained by bolts through the motor plate & mounting bracket.
- Ensure motor plate is adequately supported before releasing the bolts.

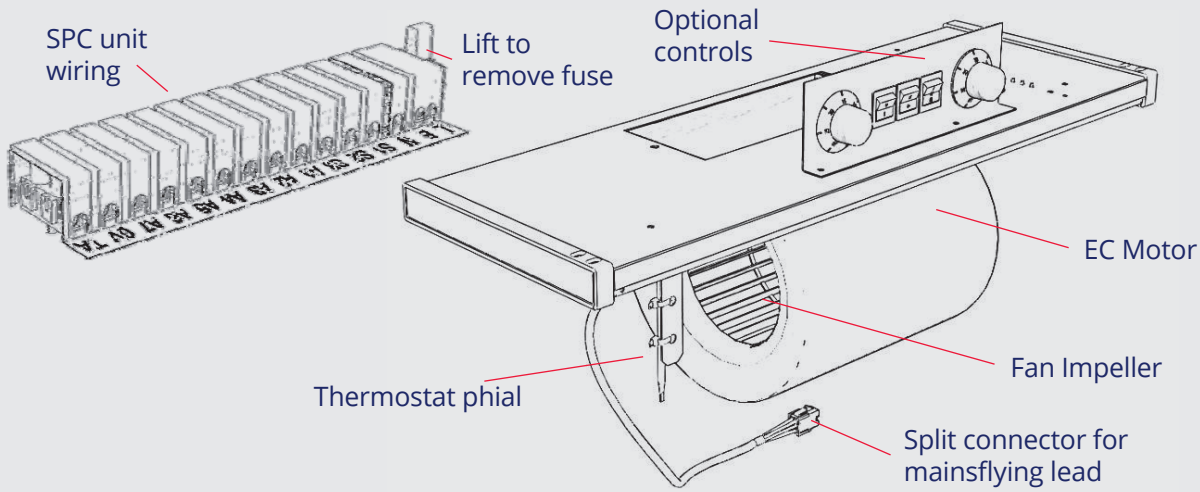

2.4 Change of Handing

Standard units are supplied with pipework connections on the RHS unless specified otherwise. The coil heat exchanger's handing can be changed on-site by reversing its position inside the unit.

After removing the front panel, the coil can be easily removed by releasing the two screws holding it to its support brackets. The flow and return pipes pass through holes in the fan plate brackets, and if reversing the coil, the knock-outs in the non-connection side will need to be removed. The holes from which the connections have moved should be taped over.

Once the coil has been reversed, the screws should be reattached to the brackets to secure it in place.

2.5 Mounting

2.5.1 Wall Mounting

Vertical units can be low level floor mounted or high level wall mounted.

Low level units are often supplied with a plinth to hide pipework and lift the unit from the floor. If they are supplied with a loose plinth then the fan convector base screws into the plinth via 6-off M5 threaded inserts.

A series of reinforced 6mm dia holes are fitted in the backplate of the unit as shown in the diagrams below. The wall should be marked out and drilled with suitable anchors prior to securing through the backplate.

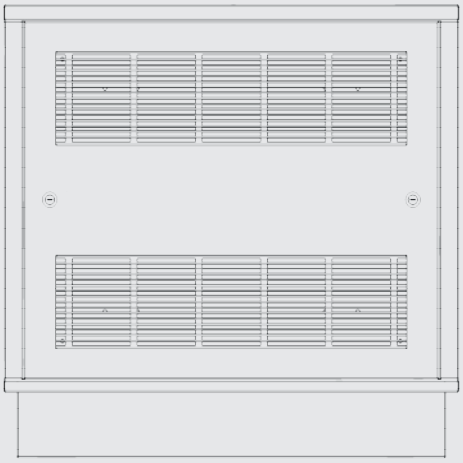

2.5.2 Ceiling mounting

Horizontal units may be bolted directly to the ceiling/soffit via the reinforced 6mm dia holes in the top plate of the unit. These hole positions are shown on the sketches below.

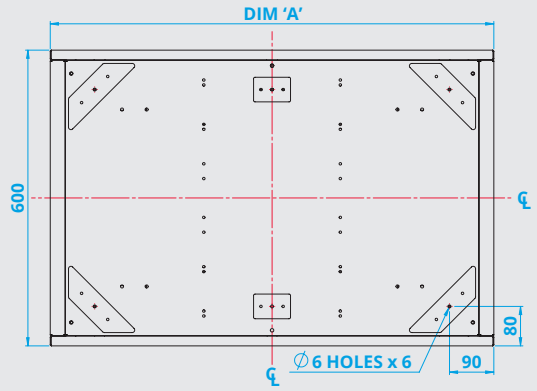

Unit Size	DIM 'A'
40	700
60	900
90	1200
150	1500

Standard unit mounting positions

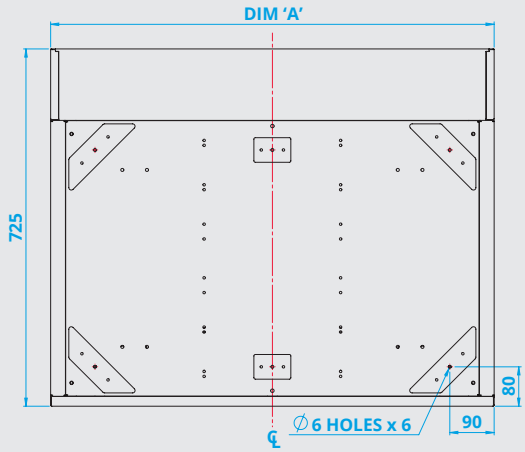

Unit Size	DIM 'A'
40	700
60	900
90	1200
150	1500

Single sloping unit mounting positions

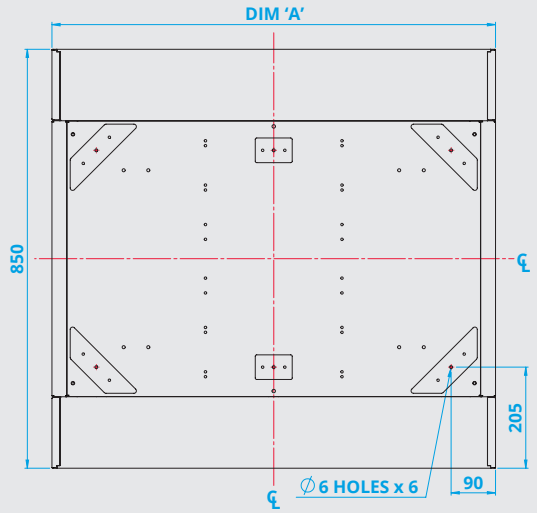

Unit Size	DIM 'A'
40	700
60	900
90	1200
150	1500

Double sloping unit mounting positions

2.5.3 Tall units

Tallboy type units for vertical mounting are supplied in three sections to assist with transport and movement on site. All three sections should be screwed together using the screws/nuts/washers supplied. The assembly should be undertaken either in the finished position or as close to it as is practical.

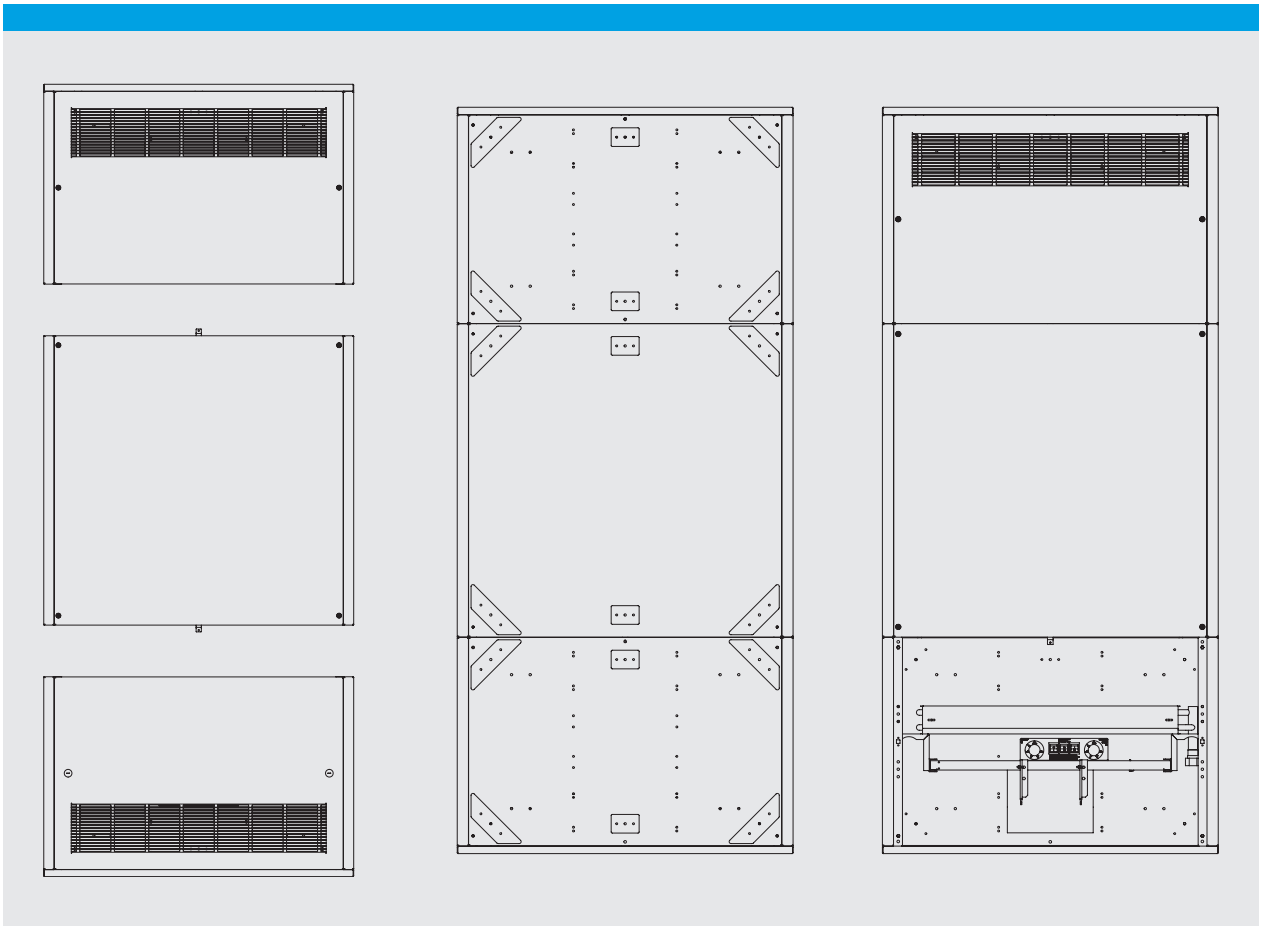

2.6 Wiring

All electrical work should be carried out in accordance with current I.E.E. regulations.

See the wiring diagram supplied with the unit for connection details.

All motors are fitted with internal self-resetting thermal overload protection (see note below) and are equipped with a motor plate mounted Anti-surge fuse (see spares list). All units are supplied with a 2 metre length of 3 core cable as a flying lead. This is normally coiled within the unit.

The customer should drill and gland to suit the installation. The supply should be wired through a suitable means of isolation such as a fused spur box or similar. Recommended fuse is not more than 3A (for standalone unit).

2.7 Electric Motor Protection

On ceiling mounted and reverse airflow applications where the fan motor is switched off for long periods, with hot water still circulating through the heat exchanger in excess of 82ºC (180ºF), it is recommended that a system be employed which automatically closes the hot water supply valve to prevent damage to the electric motor due to overheating.

2.8 Pipe connections

Standard units are supplied with flow and return pipe connections sized at ¾″ BSPP female. For the standard 2 row coil heat exchanger the flow and return pipes are interchangeable. If the fan convector is equipped with a 3 row coil which has ½″ BSPP female connections then this will be an enhanced output coil for use against low hot water temperatures or flowrates. For this type of coil the connection coming from the leaving air face should be made the flow and the connection closest to the fan outlet, on the entering air face, should be made the return connection. This ensures that the optimum heat transfer capacity can be achieved from the coil.

If a modulating valve is fitted as a part of an LST unit then the final pipe connections will be in 15mm copper and the flow and return pipes should comply with any arrows stamped on the valve body.

For connections on extended casing units, please refer to 3.6 Extending Casing Controls.

3. Electrical Data

Unit	Speed	Airflow (L/S)	EC Power Draw (W)	EC SFP (W/L/S)
Bel 40	L N H	89 112 140	11 16 27	0.12 0.14 0.19
Bel 60	L N H	108 184 223	15 53 84	0.14 0.29 0.38
Bel 90	L N H	120 231 317	18 34 73	0.15 0.15 0.23
Bel 150	L N H	180 289 329	22 58 80	0.12 0.20 0.24

3.1 Control Wiring

The wiring for internal control options is sited on the motor plate. Wiring from the motor plate to casing control options is via split connector break plugs. Customer wiring should be made to the

Customer Connection Box for other than the flying lead. Wiring to other than this point may result in voiding of the warranty.

A wiring diagram showing customer connections is included with each unit.

For wiring other than that specified on the Customer's order, the SPC Technical Department should be contacted.

3.2 Motor Wiring

The motors are Electronically Controlled. They have a 230v AC supply but are controlled via a 10v DC signal. A circuit board on the motor plate has three potentiometers fitted which give the low/normal/high speed.

If only one speeds is specified this will be normal unless otherwise stated.

3.3 Common Control Options

	Reference**	Function
Thermostat	T-1	On - off
	T-2	Change speed
	LTC	Low water temperature fan cutout
	ALTC	Adjustable low water temperature fan cutout (remote)
Switches	RS-1	On - off
	RS-2	Summer - winter
	RS-3	Change speed (3 speeds)

**Additional References: Motor plate mounted = B, Case mounted = C, Remote = R

3.4 Thermostatic Operation

The T1 and T2 Thermostats both have graduated scales to cover their range of operation. Since the thermostatic bulb is frequently unit mounted it may be offset by various amounts from the measured room temperature.

Set the knob at mid-range and adjust to suit comfort conditions within the room.

The range corresponds to a sensed temperature range of 10°C to 30°C.

T1 and T2 are adjustable and determine the comfort room temperature range. Set T2 for the low and T1 for the high point. Example: T2 16°C and T1 20°C.

The LTC is not adjustable (35°C) and provides a fan cut-off for the situation when the water temperature is not sufficiently high to provide warm blown air from the fan convector. The LTC is mounted at the non-void end of the unit, and is screwed to a copper disc which is brazed onto a return bend of the coil.

3.5 Switch Operation

The RS1 switches do not in themselves isolate the unit.

The RS2 Summer-Winter switch provides an override for the LTC and T1 (where fitted), enabling the fan to operate in the summer, for air re-circulation.

The RS3 Change Speed Switch delivers one of three voltage tappings to the motor. Where used in a remote application care should be taken when wiring into the customer connection box to ensure correct sequencing

3.6 Extending Casing Controls

Belgravia Fan Convectors are available with extended casings for occasions when it is important to incorporate valves within the extent of the unit.

An extended casing shares its width with the next size up in the standard range of units. Valves can be specified and supplied by the user or are available from SPC. SPC units can be wired such that waterside valves close whenever the sensed room air temperature exceeds setpoint.

If supplied by SPC, then valves and corresponding actuators are supplied loose for on-site fitting. The valves can be arranged to close in response to a standard on/off thermostat or can be integrated with the SPC Modulo v3 proportional controller.

4. Maintenance

4.1 General

WARNING! Electrically isolate the unit prior to work commencing

4.2 Filter

The AF3 air filter is motor plate mounted as standard. The filter is held in place between 2 brackets and is removed by sliding it out. The AF1 filter, where specified, is fitted underneath the heat exchanger and can be slid in and out of two short side rails. The AF2 inlet air filter can be specified as either internal or external and is fitted on the air inlet grille.

Filters should be gently tapped to remove most of the accumulated dust and either vacuumed clean or washed in lukewarm water with detergent. Rinse in clean water and allow to dry naturally before replacement.

If an inlet plenum is fitted, the filter is removed by dismounting the access panel to gain access.

4.3 Coil

Remove access panel and clean the coil with a brush or by vacuuming, taking care not to damage the coil surfaces.

4.4 Fan Set

The motor has sealed for life sleeve bearings, which under normal circumstances require no user maintenance. The motor deck is accessed by means of the access panel and is readily removed if required. Occasional vacuuming or cleaning of the motor plate is recommended.

4.5 Fusing

Fan motor- Anti-surge 20mm x 5mm 2A to BS4265/IEC127

(see wiring diagram).

4.6 Spares

- **Fuses** - as above
- **Filters** - quote model number (BEL 40/60 etc.) or unit width. Units manufactured pre 1995 will require different filters to later units
- **Controls** - as specification
- **Motor** - quote model number on motor plate
  Quote motor plate mounted (AF3) or coil mounted (AF1) or grille mounted (AF2).
  Quote wiring diagram number or marked number if possible.

5. Fault Finding

5.1 No Fan Operation

1. Check fuse on motor plate
2. Check power supply to unit
3. Check loose wiring and breaker plugs or damage to wiring
4. Check switches
5. Check impellers run freely
6. Check valve wiring for fan operation

5.2 No Heating

1. Check thermostat operation (change set point to maximum) where fitted
2. Check integrity of wiring
3. Check coil vented
4. Check hot water to unit
5. Check thermostat bulb in airstream
6. Check LTC contact on pipe-work or return bend

6. Appendix

6.1 Standard Dimensions

Styles A, J, K, S, U

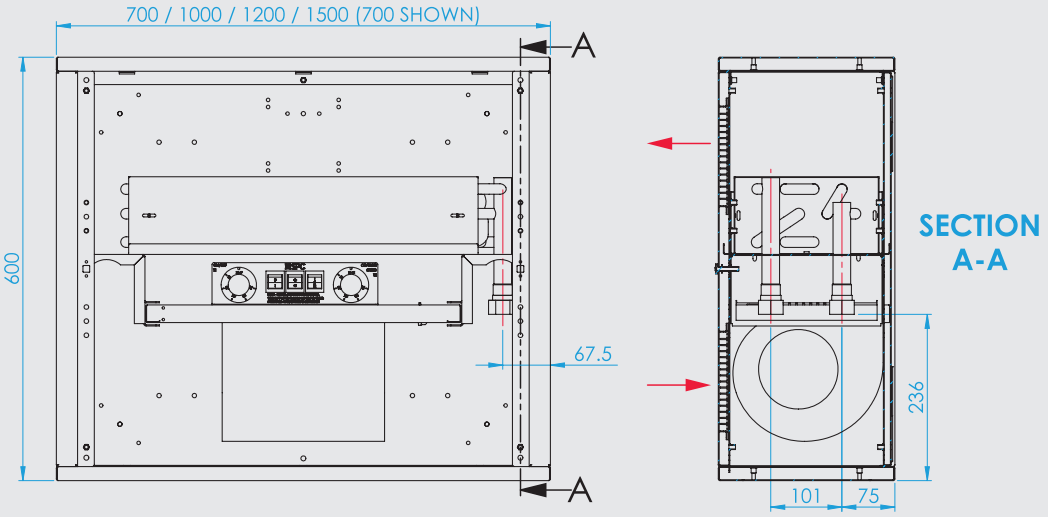

Styles A/RAF, J /RAF, K /RAF, S /RAF, U /RAF

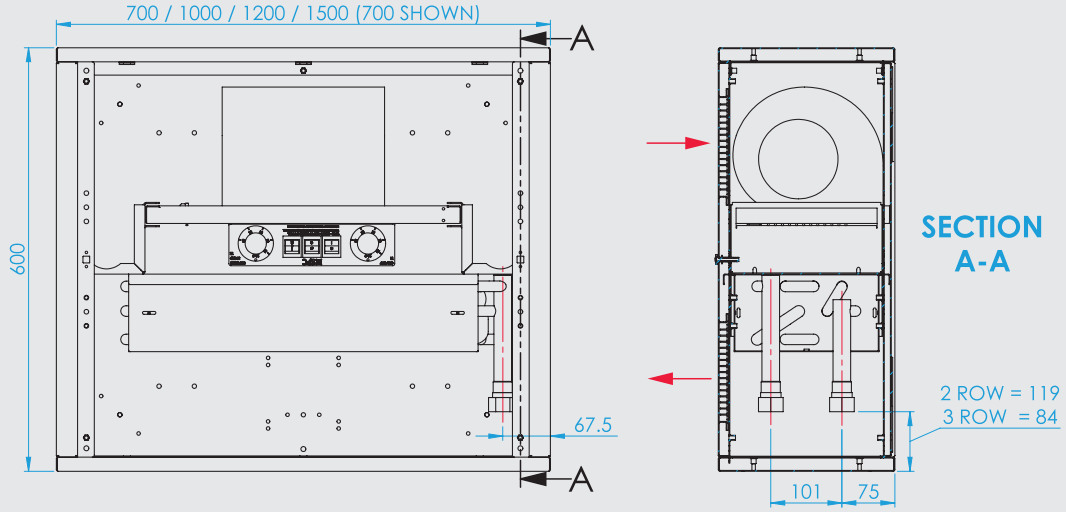

Unit Size	BEL40	BEL60	BEL90	BEL150
Case Length (mm)	700	900	1200	1500
Height (mm)	600			
Depth (mm)	250			
Spigot Width	540	740	1040	1340
Spigot Height	138			

Units shown with rh connections, dimensions same with lh connections. Connections through knock-outs in bottom panel or through plinth. Plinth not shown.

Spigots only on J, K & S styles not shown.

Pipe connections 3/4" BSP on all models 1/2" on lowflow heat exchangers.

Front Panel removed.

Styles B, V

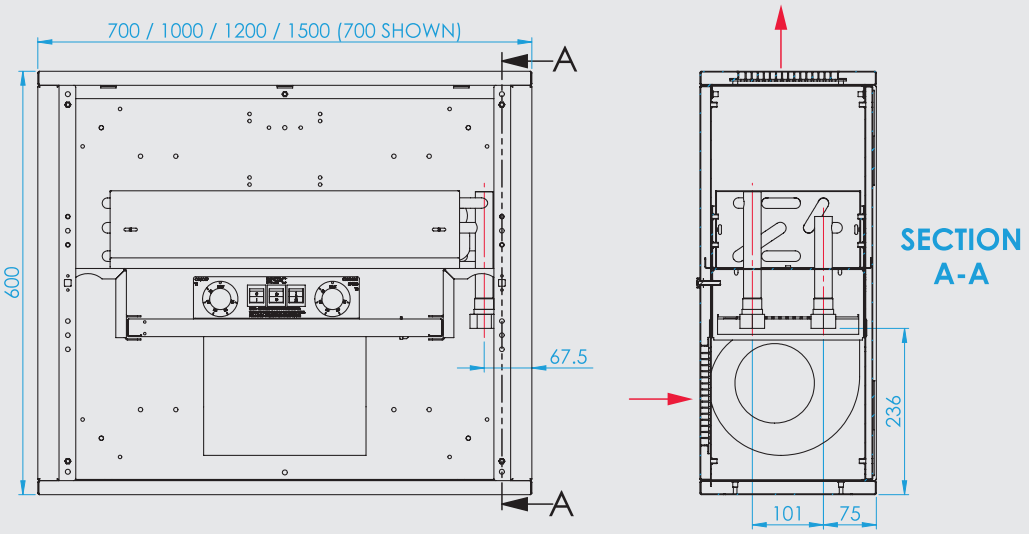

Styles B/RAF, V/RAF

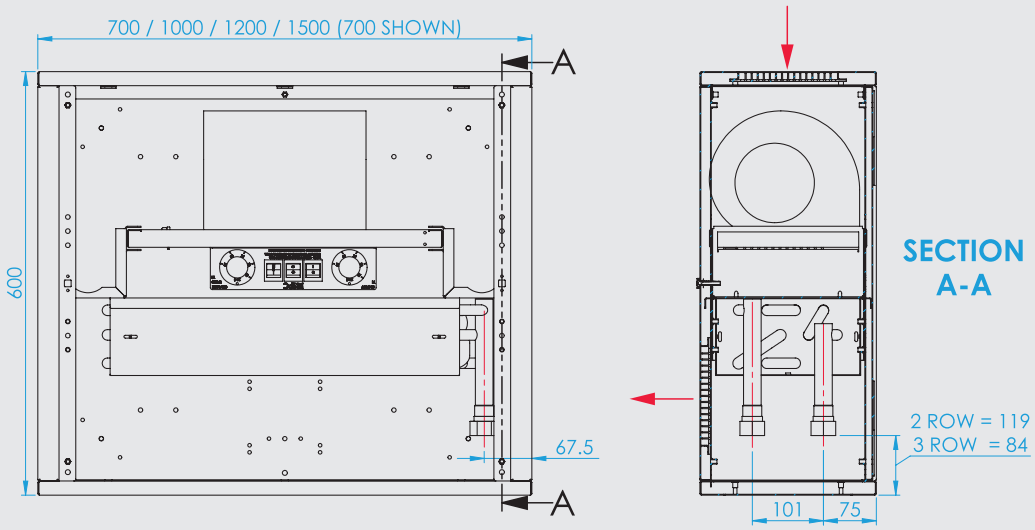

Unit Size	BEL40	BEL60	BEL90	BEL150
Case Length (mm)	700	900	1200	1500
Height (mm)	600			
Depth (mm)	250			

Units shown with rh connections, dimensions same with lh connections. Connections through knock-outs in bottom panel or through plinth. Plinth not shown.

V style for ceiling mounting.

Pipe connections 3/4" BSP on all models 1/2" on lowflow heat exchangers.

Front Panel removed.

Styles B/INVCS, V/INVCS

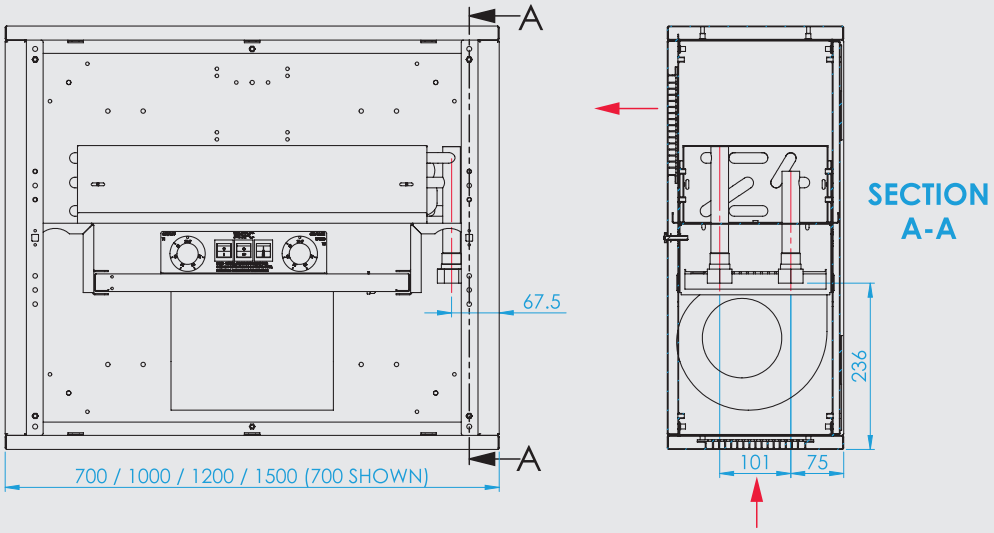

Styles B/INVCS /RAF, V/INVCS/RAF

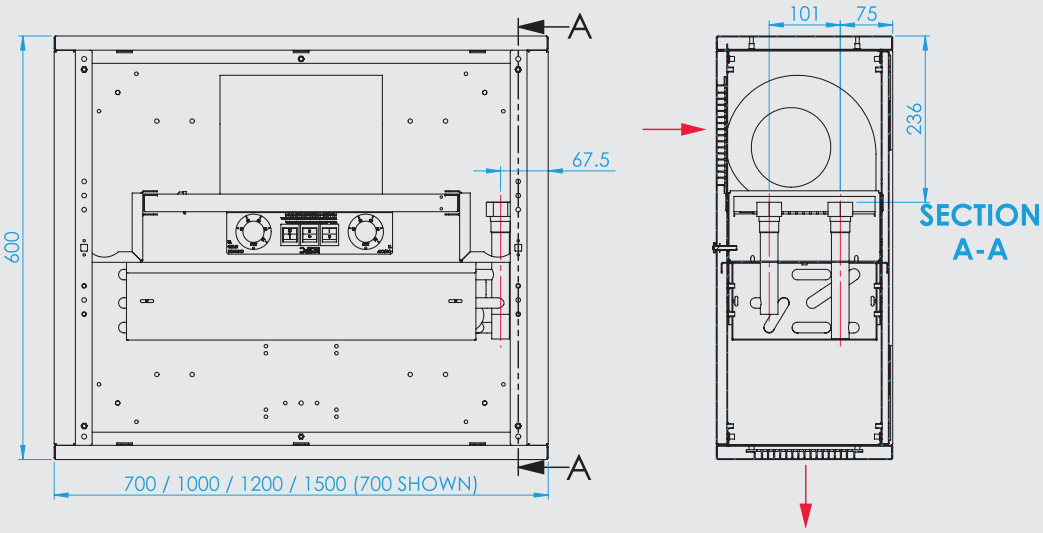

Unit Size	BEL40	BEL60	BEL90	BEL150
Case Length (mm)	700	900	1200	1500
Height (mm)	600			
Depth (mm)	250			

Units shown with rh connections, dimensions same with lh connections. Connections through side panel on INVCS units or top panel on INVCS/RAF units.

V style for ceiling mounting.

Pipe connections 3/4" BSP on all models 1/2" on lowflow heat exchangers.

Front Panel removed.

Styles BS, VS

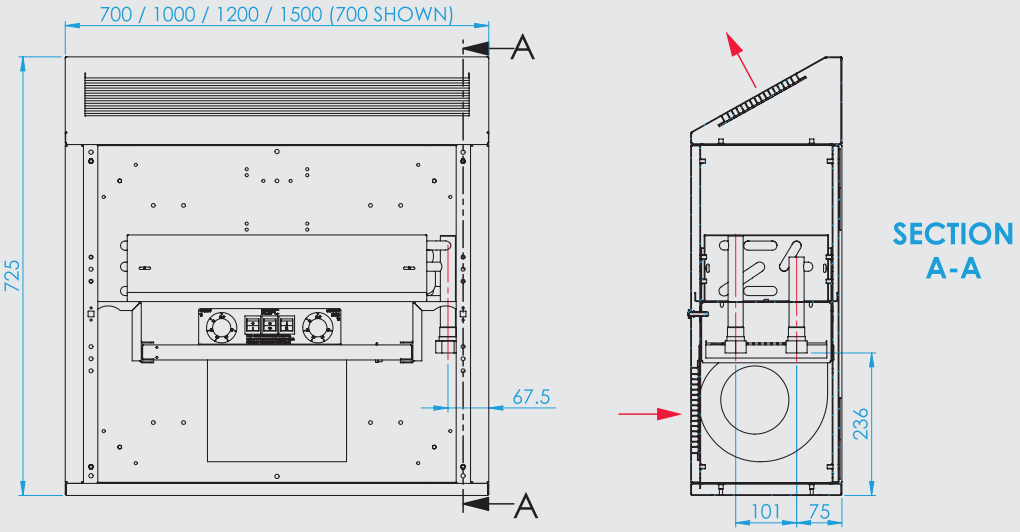

Styles BS/RAF, VS/RAF

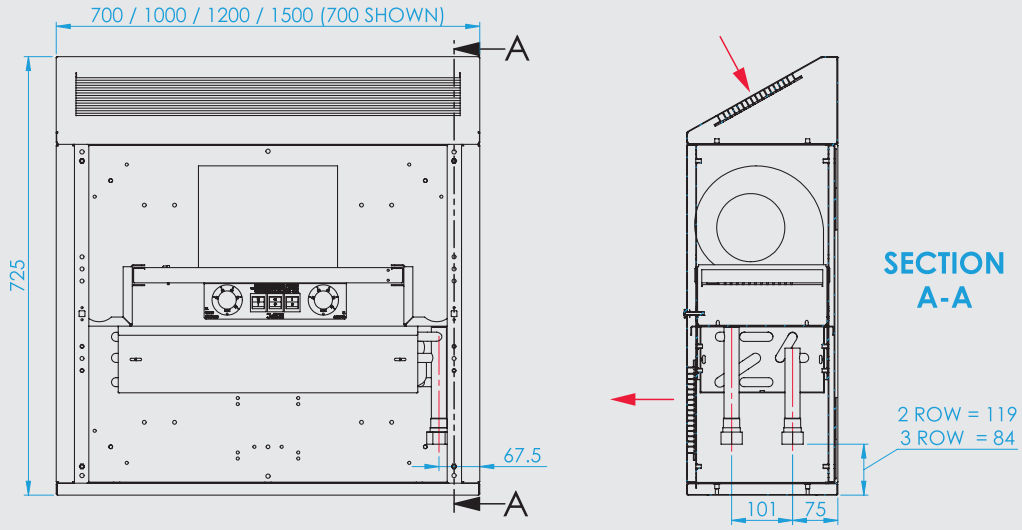

Unit Size	BEL40	BEL60	BEL90	BEL150
Case Length (mm)	700	900	1200	1500
Height (mm)	725			
Depth (mm)	250			

Units shown with rh connections, dimensions same with lh connections. Connections through knock-outs in bottom panel or through plinth. Plinth not shown.

VS style for ceiling mounting.

Pipe connections 3/4" BSP on all models 1/2" on lowflow heat exchangers.

Front Panel removed.

Styles BS/INVCS, VS/INVCS

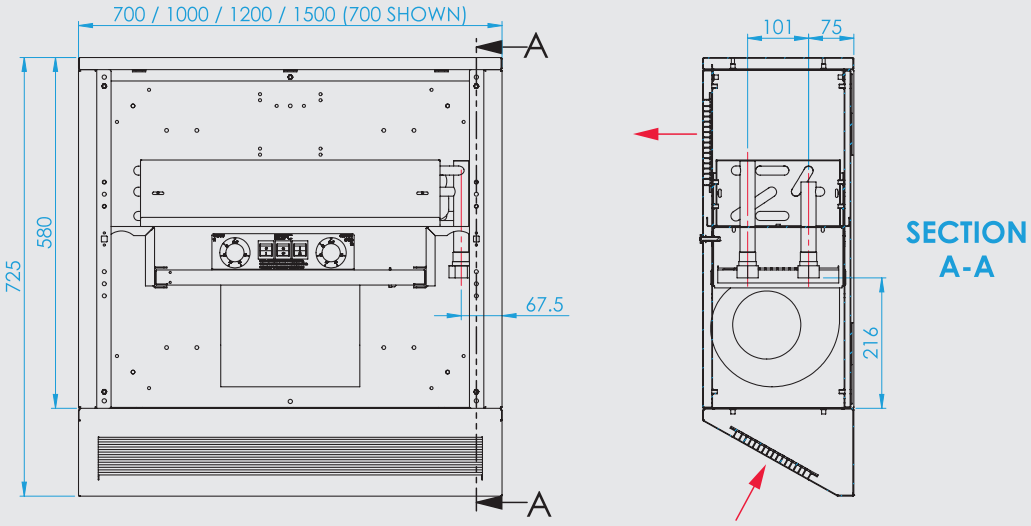

Styles BS/INVCS /RAF, VS/INVCS/RAF

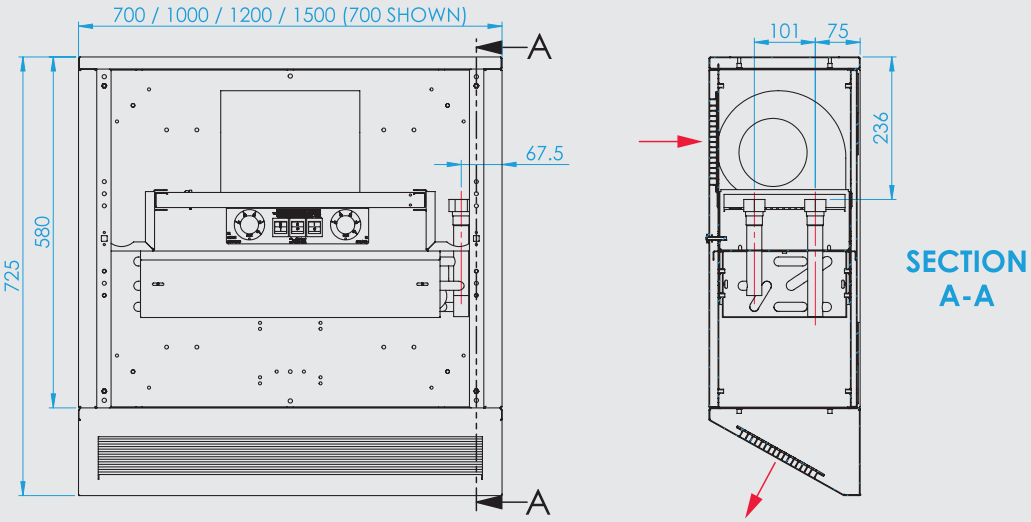

Unit Size	BEL40	BEL60	BEL90	BEL150
Case Length (mm)	700	900	1200	1500
Height (mm)	725			
Depth (mm)	250			

Units shown with rh connections, dimensions same with lh connections. Connections through side panel on INVCS units or top panel on INVCS/RAF units.

VS style for ceiling mounting.

Pipe connections 3/4" BSP on all models 1/2" on lowflow heat exchangers.

Front Panel removed.

Styles HS, QS

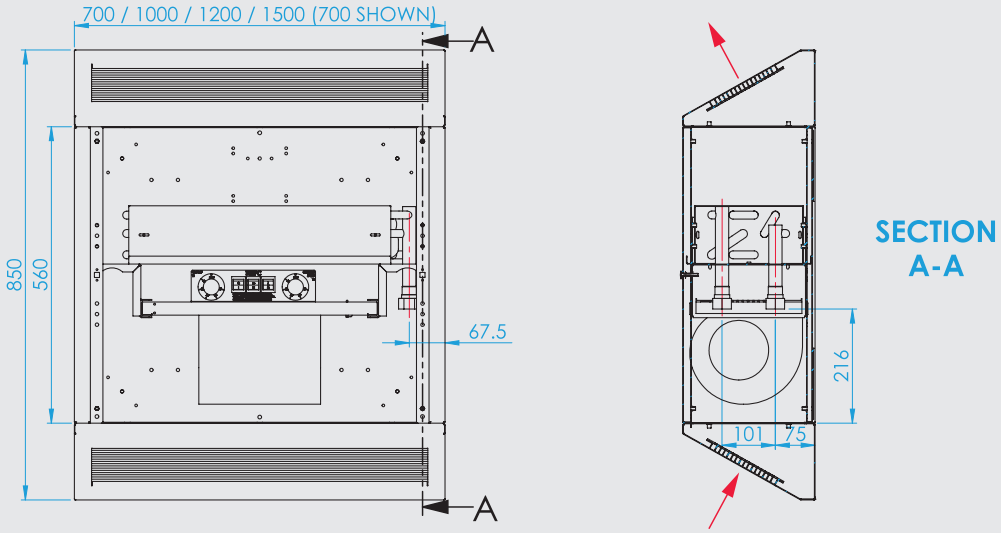

Styles HS/RAF, QS/RAF

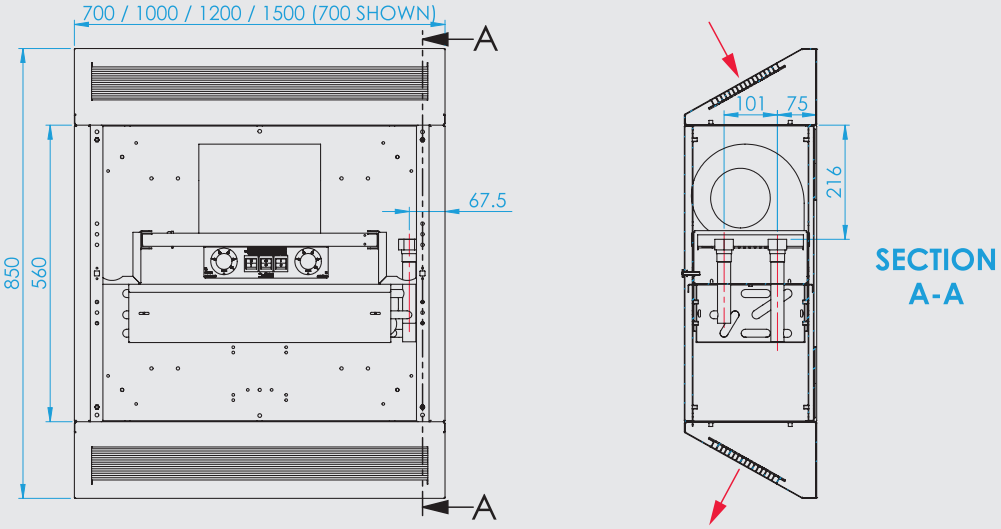

Unit Size	BEL40	BEL60	BEL90	BEL150
Case Length (mm)	700	900	1200	1500
Height (mm)	850			
Depth (mm)	250			

Units shown with rh connections, dimensions same with lh connections.
Connections through side panel.

QS style for ceiling mounting.

Pipe connections 3/4" BSP on all models 1/2" on lowflow heat exchangers.

Front Panel removed.

Styles X, Y, Z

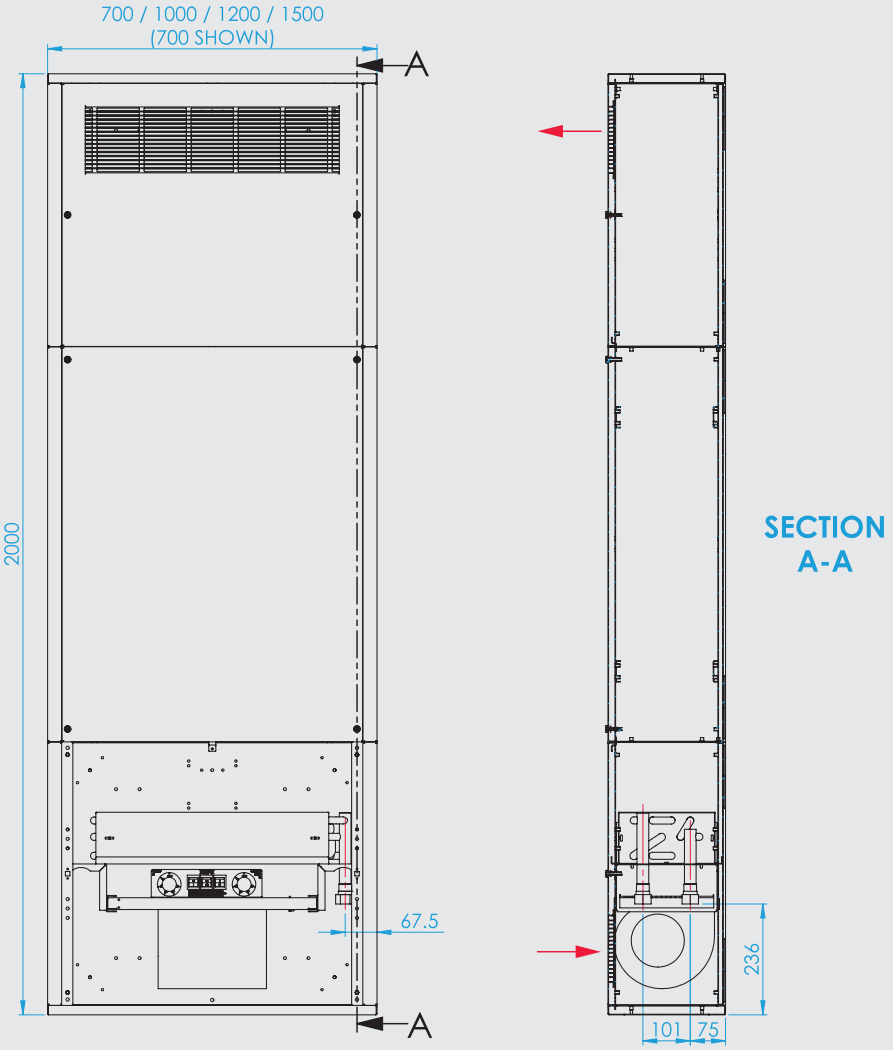

Unit Size	BEL40	BEL60	BEL90	BEL150
Case Length (mm)	700	900	1200	1500
Height (mm)	2000 (Special height available on request)			
Depth (mm)	250			
Spigot Width	540	740	1040	1340
Spigot Height	138			

Units shown with rh connections, dimensions same with lh connections. Connections through knock-outs in bottom panel or through plinth. Plinth not shown.

Spigots only on X & Y styles not shown.

Pipe connections 3/4" BSP on all models 1/2" on lowflow heat exchangers.

Front Panel removed.

Styles X/RAF, Y/RAF, Z/RAF

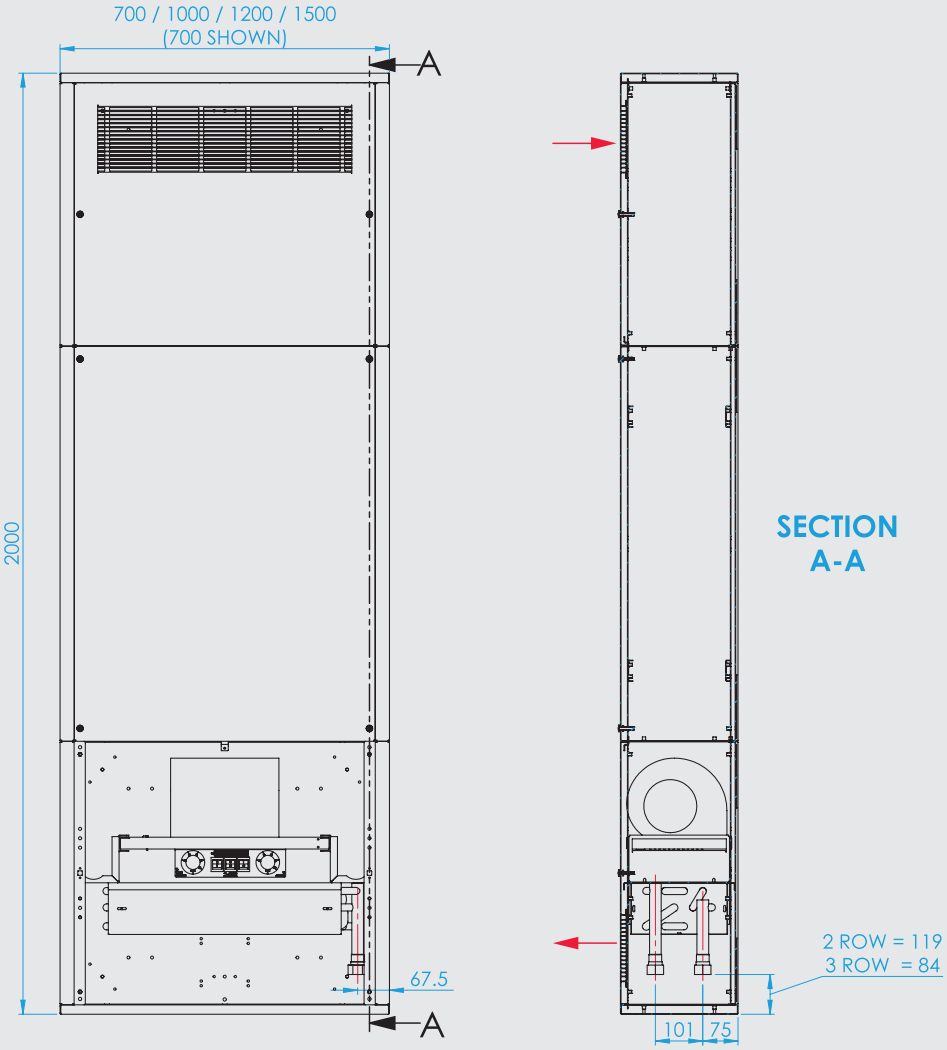

Unit Size	BEL40	BEL60	BEL90	BEL150
Case Length (mm)	700	900	1200	1500
Height (mm)	2000 (Special height available on request)			
Depth (mm)	250			
Spigot Width	540	740	1040	1340
Spigot Height	138			

Units shown with rh connections, dimensions same with lh connections. Connections through knock-outs in bottom panel or through plinth. Plinth not shown.

Spigots only on X & Y styles not shown.

Pipe connections 3/4" BSP on all models 1/2" on lowflow heat exchangers.

Front Panel removed.

6.2 Extended Casings

Styles A, J, K, S, U all Extended Units

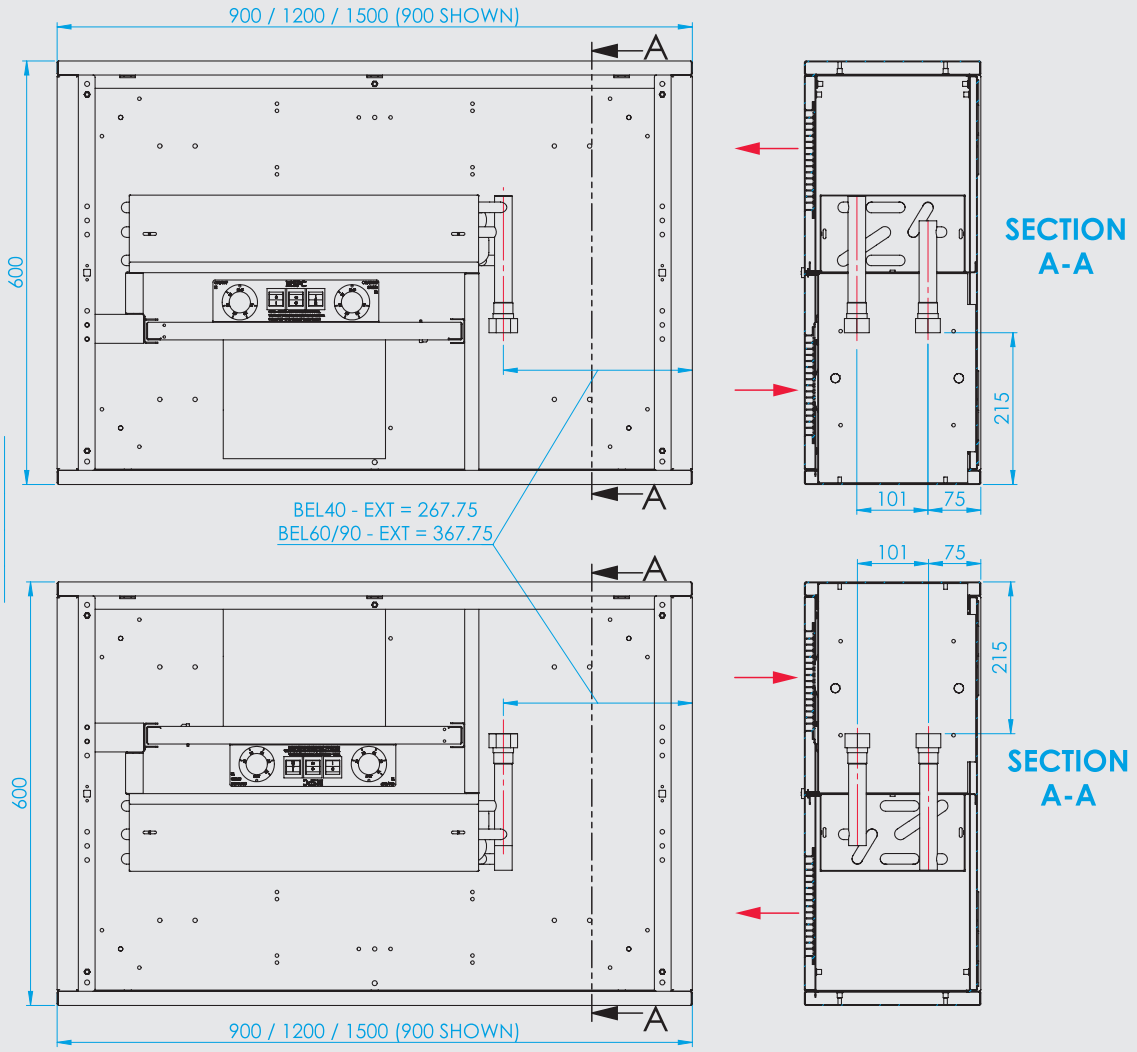

Styles A/RAF, J /RAF, K /RAF, S /RAF, U /RAF all Extended Units

Unit Size	BEL40	BEL60	BEL90
Case Length (mm)	900	1200	1500
Height (mm)		600	
Depth (mm)		250	
Spigot Width	740	1040	1340
Spigot Height		138	

Units shown with rh connections, dimensions same with lh connections. Connections through knock-outs in bottom panel or through plinth. Plinth not shown.

Spigots only on J, K & S styles not shown.

Pipe connections 3/4" BSP on all models 1/2" on lowflow heat exchangers.

Front Panel removed.

Styles B + EXT, V + EXT

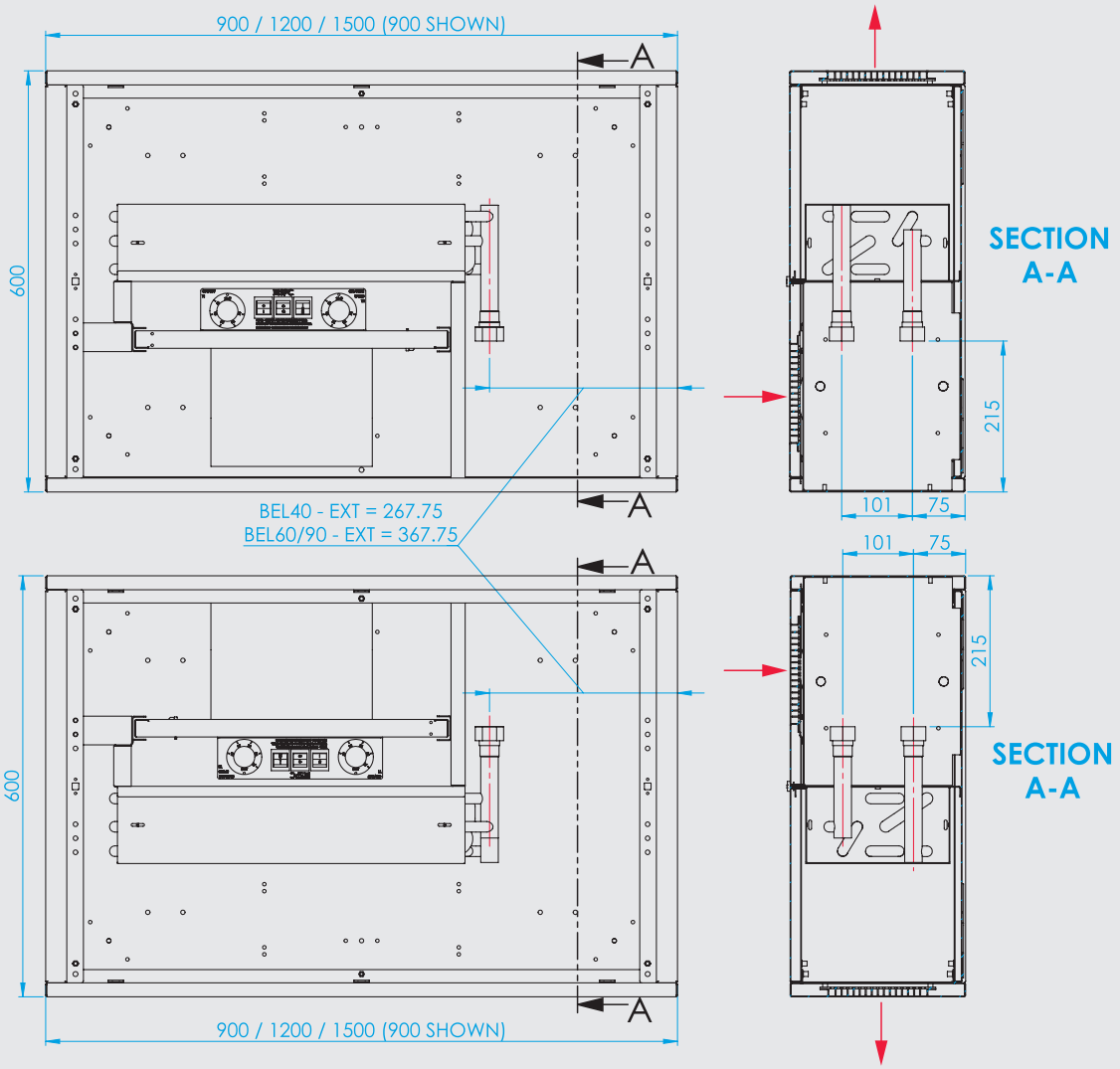

Styles B/INVCS/RAF + EXT, V/INVCS/RAF + EXT

Unit Size	BEL40	BEL60	BEL90
Case Length (mm)	900	1200	1500
Height (mm)		600	
Depth (mm)		250	

Units shown with rh connections, dimensions same with lh connections. Connections through top panel on INVCS units. Connections through knock-outs in bottom panel or through plinth on standard units. Plinth not shown.

V style for ceiling mounting.

Not available on RAF or INVCS units only.

Pipe connections 3/4" BSP on all models 1/2" on lowflow heat exchangers.

Front Panel removed.

Styles BS + EXT, VS + EXT

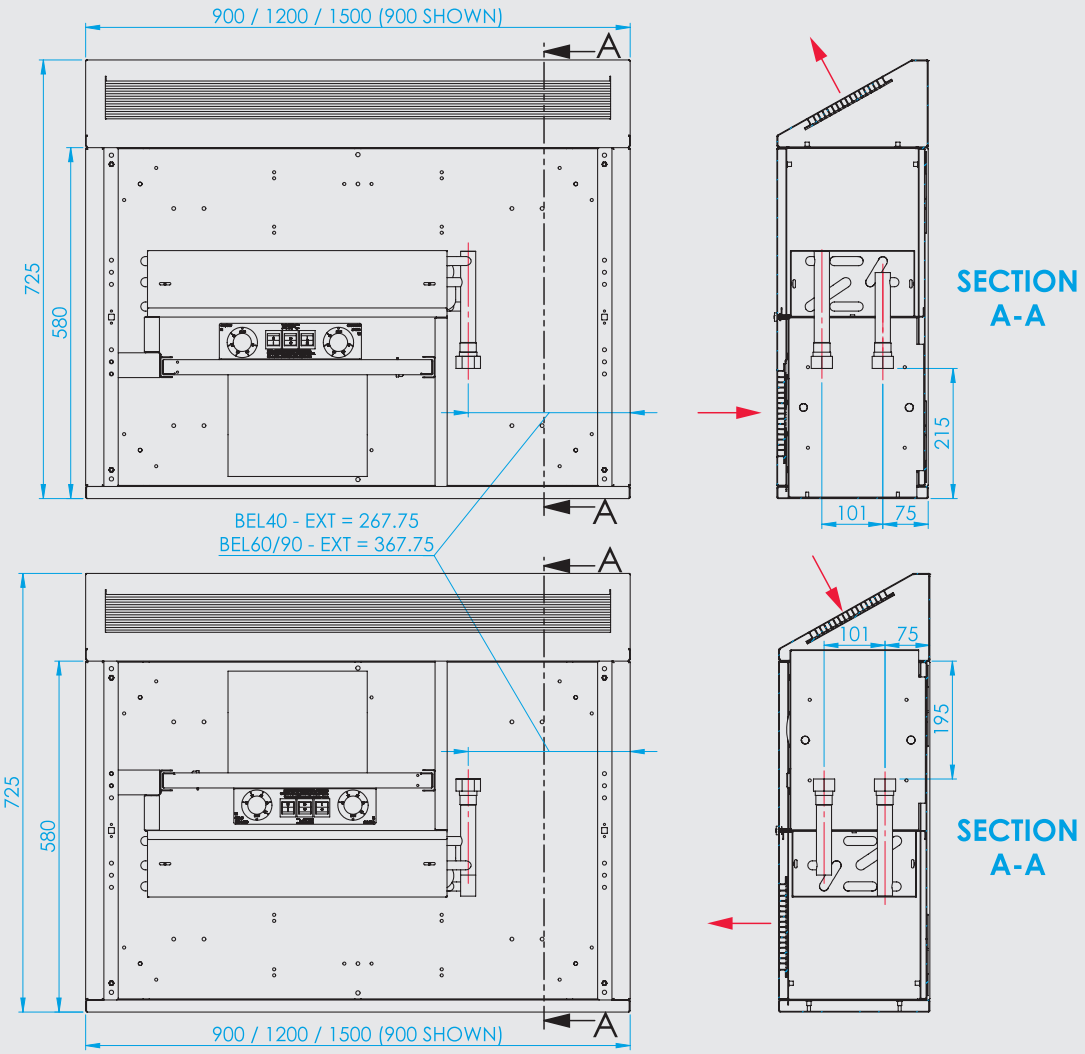

Styles BS/RAF + EXT, VS/RAF + EXT

Unit Size	BEL40	BEL60	BEL90
Case Length (mm)	900	1200	1500
Height (mm)		725	
Depth (mm)		250	

Units shown with rh connections, dimensions same with lh connections. Connections through knock-outs in bottom panel or through plinth. Plinth not shown.

VS style for ceiling mounting.

Pipe connections 3/4" BSP on all models 1/2" on lowflow heat exchangers.

Front Panel removed.

Styles BS/INVCS + EXT, VS/INVCS + EXT

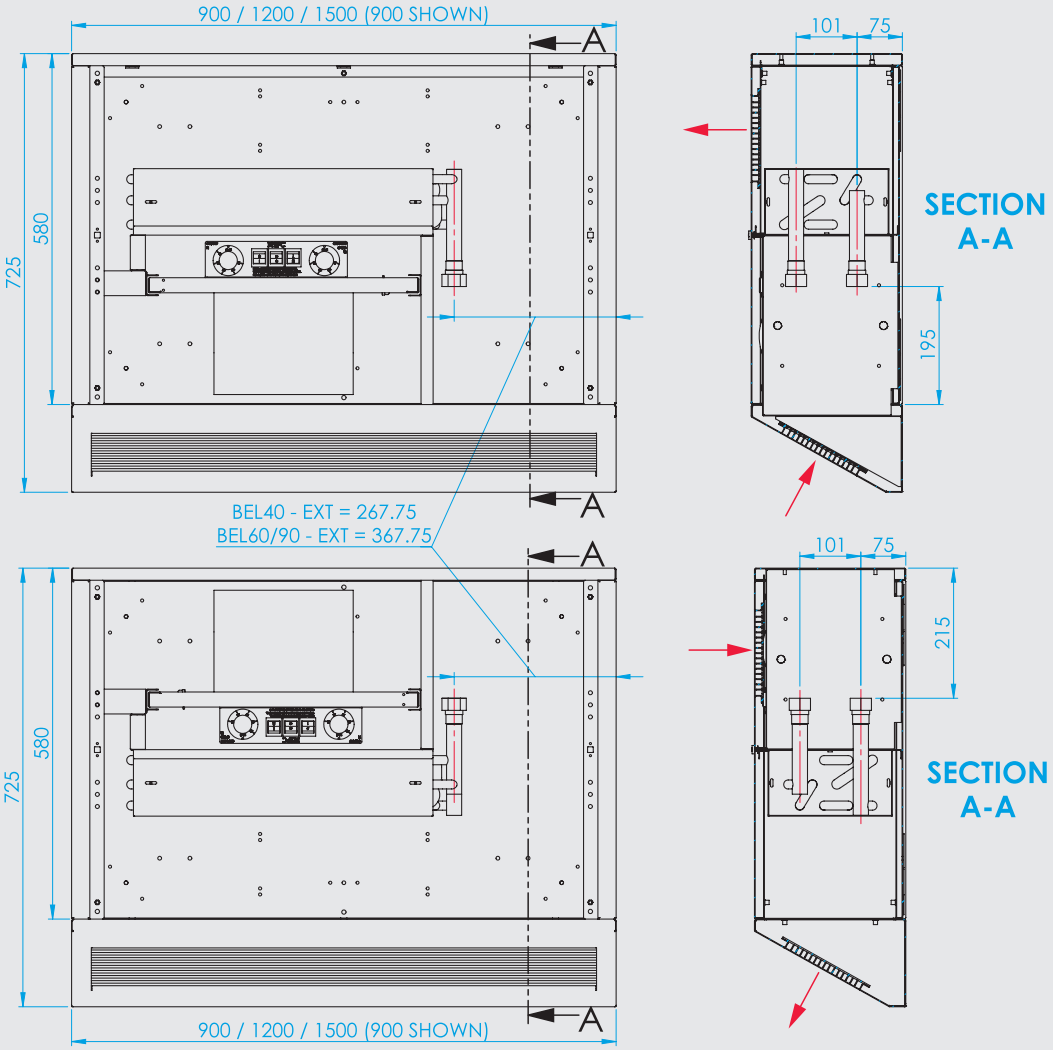

Styles BS/INVCS/RAF + EXT, VS/INVCS/RAF + EXT

Unit Size	BEL40	BEL60	BEL90
Case Length (mm)	900	1200	1500
Height (mm)		725	
Depth (mm)		250	

Units shown with rh connections, dimensions same with lh connections. Connections through side panel on INVCS units or top on INVCS/RAF units.

VS style for ceiling mounting.

Pipe connections 3/4" BSP on all models 1/2" on lowflow heat exchangers.

Front Panel removed.

Styles HS + EXT, QS + EXT

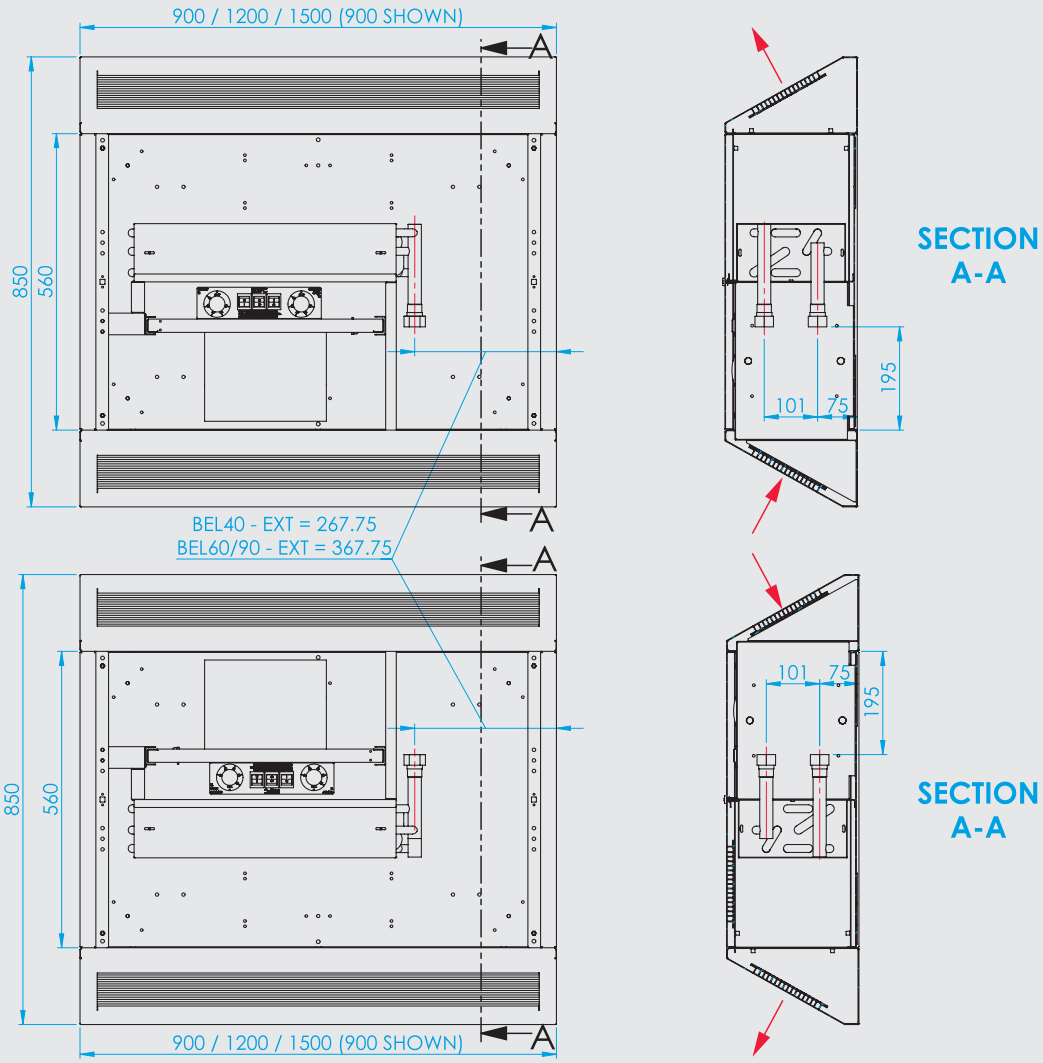

Styles HS/RAF + EXT, QS/RAF + EXT

Unit Size	BEL40	BEL60	BEL90
Case Length (mm)	900	1200	1500
Height (mm)		850	
Depth (mm)		250	

Units shown with rh connections, dimensions same with lh connections.
Connections through side panel.

QS style for ceiling mounting.

Pipe connections 3/4" BSP on all models 1/2" on lowflow heat exchangers.

Front Panel removed.

Styles X + EXT, Y + EXT, Z + EXT

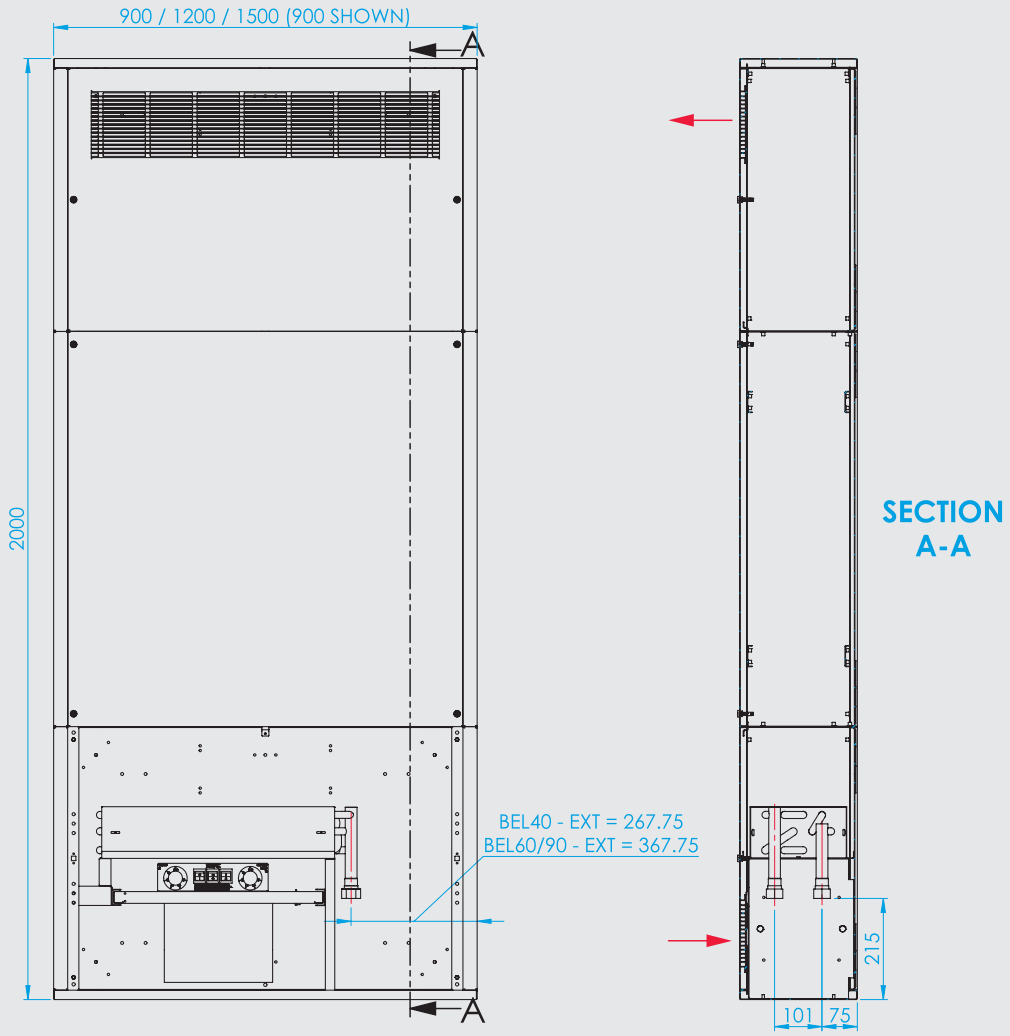

Unit Size	BEL40	BEL60	BEL90
Case Length (mm)	900	1200	1500
Height (mm)	2000 (Special height available on request)		
Depth (mm)	250		
Spigot Width	740	1040	1340
Spigot Height	138		

Units shown with rh connections, dimensions same with lh connections. Connections through knock-outs in bottom panel or through plinth. Plinth not shown.

Spigots only on X & Y styles not shown.

Pipe connections 3/4" BSP on all models 1/2" on lowflow heat exchangers.

Front Panel removed.

Styles X/RAF + EXT, Y/RAF + EXT, Z/RAF + EXT

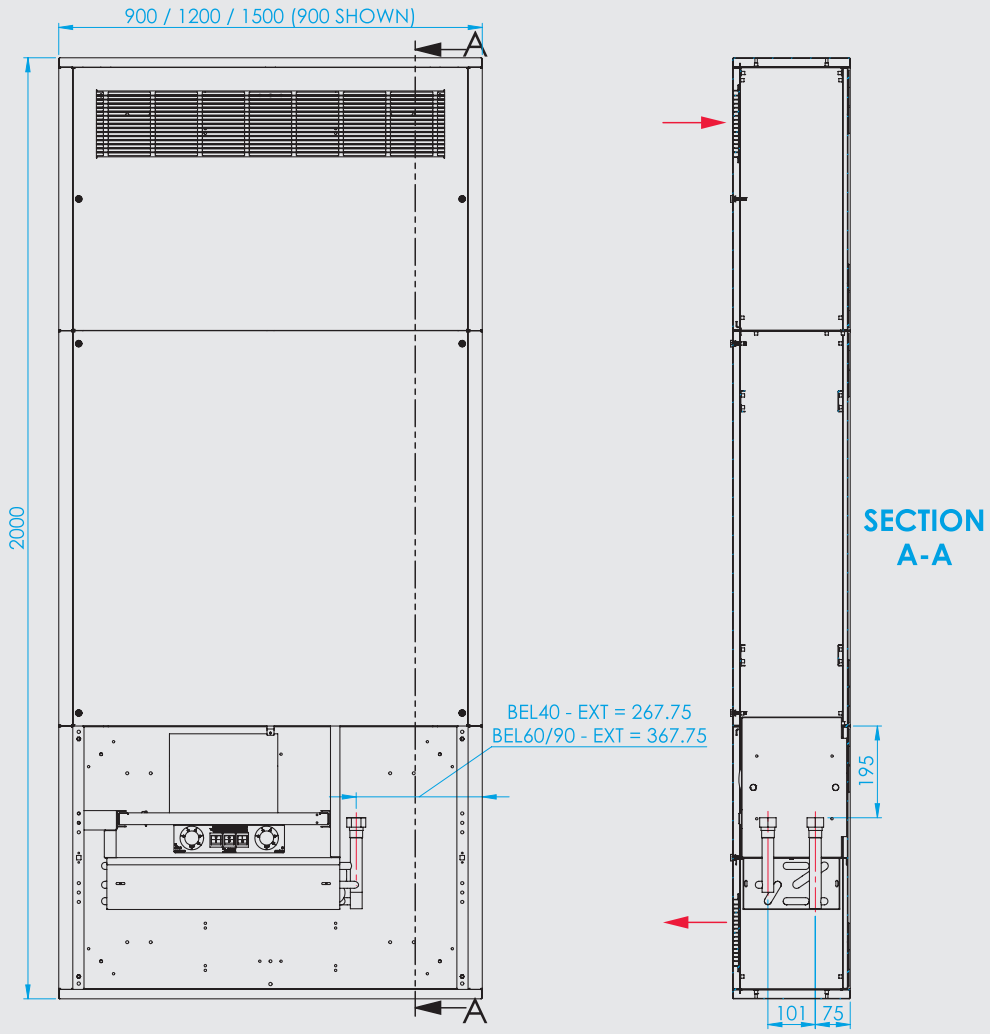

Unit Size	BEL40	BEL60	BEL90
Case Length (mm)	900	1200	1500
Height (mm)	2000 (Special height available on request)		
Depth (mm)	250		
Spigot Width	740	1040	1340
Spigot Height	138		

Units shown with rh connections, dimensions same with lh connections. Connections through knock-outs in bottom panel or through plinth. Plinth not shown.

Spigots only on X & Y styles not shown.

Pipe connections 3/4" BSP on all models 1/2" on lowflow heat exchangers.

Front Panel removed.

7. WEEE Directive

(Waste Electrical and Electronic Equipment)

7.1 WEEE Marking

All products that are subject to the WEEE Directive supplied by SPC from 2007 are compliant with the WEEE marking requirements.

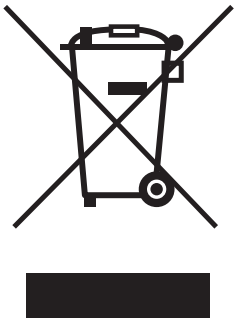

Such products are marked with the "crossed out wheelie bin" WEEE symbol shown here.

SPC WEEE Certificate No: WEE/KF0742YR

7.2 Information for Customers

According to the timelines and requirements of European Union member state WEEE legislation, the following customer information is provided for all SPC supplied products subject to the WEEE directive.

This symbol on the product or on its packaging indicates that the product must not be disposed of with normal household waste.

Instead, it is your responsibility to dispose of your waste equipment by arranging to return it to a designated collection point for the recycling of waste electrical and electronic equipment. By separating and recycling your waste equipment at the time of disposal you will help to conserve natural resources and ensure that the equipment is recycled in a manner that protects human health and the environment. For more information about how to recycle your SPC supplied waste equipment for recycling, please contact our customer services department on +44 (0)1162490044 or customerservice@spc-hvac.co.uk.

PART OF THE CARVER GROUP

SPC House
Evington Valley Road
Leicester
LE5 5LU

T: 0116 249 0044
E: spc@spc-hvac.co.uk
spc-hvac.co.uk