Metropolitan Trench Heating and Cooling

SPC

Metropolitan Trench Heating and Cooling

Contents

		Page
1	Natural & Powered Trench Heaters	3
2	Natural Trench	4
	Connections & Dimensions	4
	Heat outputs	5
	Water pressure drop	6
	Drawings	7
3	Powered Trench	8
	Connections & Dimensions	8
	Heat outputs	9
	Water pressure drop	10
	Drawings	11
4	Controls – Natural & Powered	12
5	Specification – Natural & Powered Trench	13
6	Cooling Trench	14
	Connections & Dimensions	15
	Cooling outputs	16
	Water pressure drop	17
	Drawings	18
	Controls	20
7	Specification – Cooling Trench	21
8	Electric Trench Heating	22
9	Architectural Grilles	23

S & P Coil Products Limited reserves the right to amend specification without any notice, whilst pursuing a policy of continual improvements in performance and design

Metropolitan Natural & Powered Trench Heaters

Metropolitan Natural and Powered Trench Heater units are designed to enhance comfort in large glazed areas. Installed beneath floor-to-ceiling windows, these units effectively eliminate draughts by allowing cool air to drop into the trench and pass through a coil/heat exchanger, picking up heat and circulating it over the window. The warmed air then circulates around the room before eventually cooling and falling to the floor.

These trench heaters are suitable for installation in both screeded and suspended floors, making them versatile for various settings such as offices, hotels, restaurants, and residential properties.

Powered units are available for situations requiring enhanced heat outputs, featuring low-power fans that operate quietly and use EC/DC technology for energy efficiency.

Manufactured in Leicester, UK, these units undergo independent testing to meet the high standards of BS EN 16430. With their ability to reduce glazing losses and create a more comfortable environment, Metropolitan Trench Heaters are ideal for spaces with large glazed areas. They offer efficient heating and improved controllability, making them an excellent choice for enhancing comfort in various settings while maintaining a whisper-quiet operation.

S & P Coil Products Limited reserves the right to amend specification without any notice, whilst pursuing a policy of continual improvements in performance and design

Natural Trench

Connections & Dimensions

Connections can be front or side entry

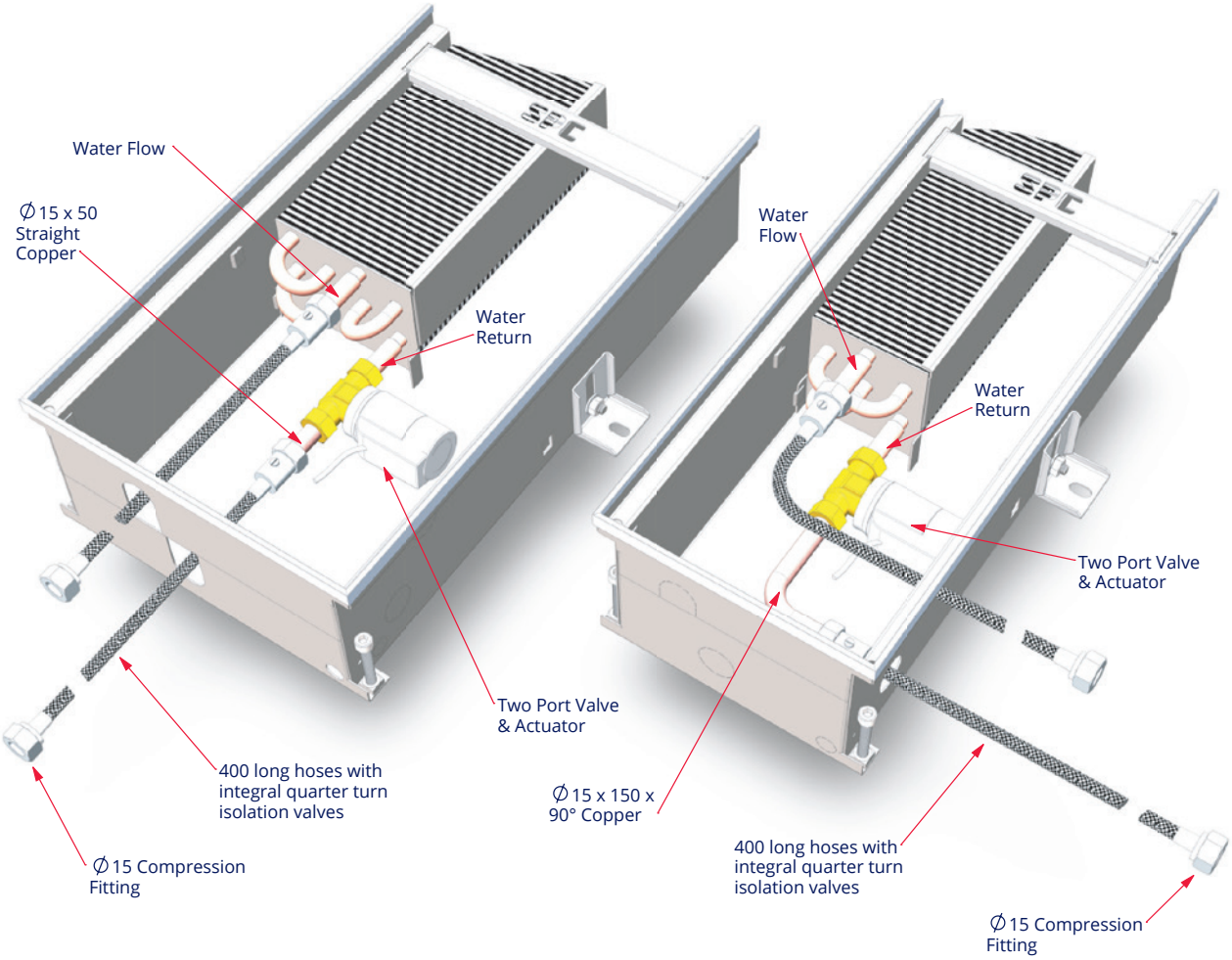

The 2-port valve and actuator will not fit inside the two smallest sizes, and must be fitted externally to the trench unit.

*Hose lengths are approximate.

Two Port Valve & Actuator Fitting			
Height Width	**90**	**145**	**200**
150	External Only	External Only	External or as Shown
225	External or as Shown	External or as Shown	External or as Shown
300	External or as Shown	External or as Shown	External or as Shown

Dimensions

- 3x widths – 150mm, 225mm and 300mm
- 3x heights – 90mm, 145mm and 200mm
- 24x lengths – 800mm to 3100mm in 100mm increments

Easily create longer runs by connecting together using flangeless end plates.

S & P Coil Products Limited reserves the right to amend specification without any notice, whilst pursuing a policy of continual improvements in performance and design

Heat outputs

For information on outputs for other conditions contact SPC's sales team.

LPHW = 80/60°C & Room Air Temperature = 20°C (ΔT = 50°C)

Width	150mm			225mm			300mm		
Height	90mm	145mm	200mm	90mm	145mm	200mm	90mm	145mm	200mm
Trench Length (mm)									
900	120	197	278	180	337	368	239	430	491
1000	141	232	327	211	397	433	281	506	578
1100	162	266	376	243	456	497	323	581	664
1200	183	301	425	274	515	562	365	657	750
1300	204	336	473	306	574	627	407	732	836
1400	225	370	522	337	633	691	449	808	922
1500	246	405	571	369	693	756	491	883	1009
1600	267	439	620	400	752	820	533	959	1095
1700	288	474	669	432	811	885	575	1034	1181
1800	309	509	717	463	870	950	617	1110	1267
1900	330	543	766	495	929	1014	659	1185	1353
2000	351	578	815	526	989	1079	701	1261	1440
2100	372	612	864	558	1048	1143	743	1336	1526
2200	393	647	913	589	1107	1208	785	1412	1612
2300	414	682	961	621	1166	1273	827	1487	1698
2400	435	716	1010	652	1225	1337	869	1563	1784
2500	456	751	1059	684	1285	1402	911	1638	1871
2600	477	785	1108	715	1344	1466	953	1714	1957
2700	498	820	1157	747	1403	1531	995	1789	2043
2800	519	855	1205	778	1462	1596	1037	1865	2129
2900	540	889	1254	810	1521	1660	1079	1940	2215
3000	561	924	1303	841	1581	1725	1121	2016	2302
3100	582	958	1352	873	1640	1789	1163	2091	2388

Heat output in W.

Water flow rate calculated as follows:
Water flow rate (l/s) = Heat output (W)/4190/Water temperature drop (°C)

S & P Coil Products Limited reserves the right to amend specification without any notice, whilst pursuing a policy of continual improvements in performance and design

Water pressure drop

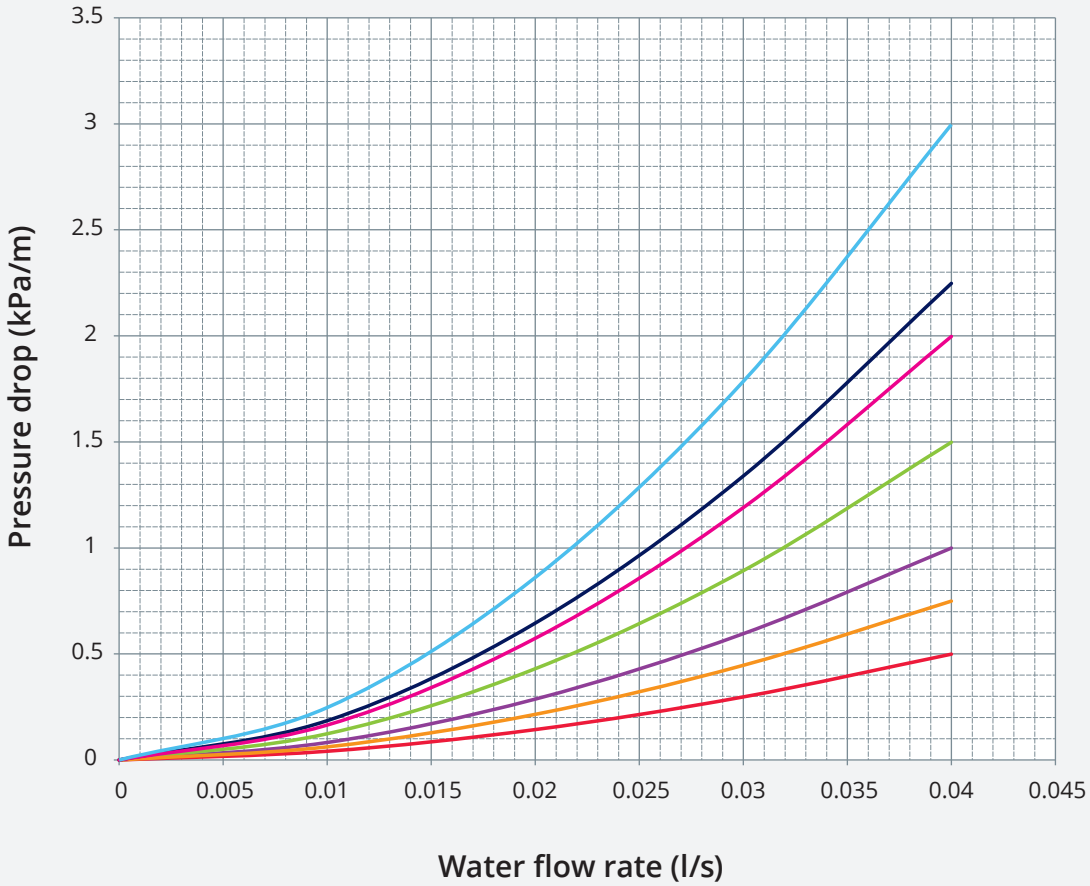

Key

- 150/90
- 150/145 & 300/90
- 150/200 & 225/145
- 225/90
- 225/200
- 300/145
- 300/200

Water pressure drop in kPa per metre run of trench.

S & P Coil Products Limited reserves the right to amend specification without any notice, whilst pursuing a policy of continual improvements in performance and design

Dimensional drawings

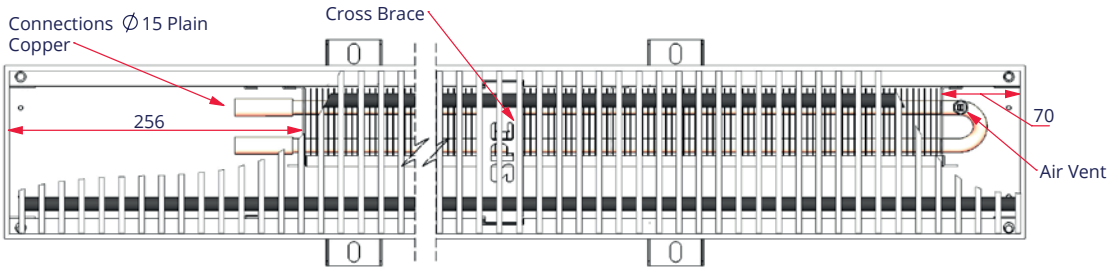

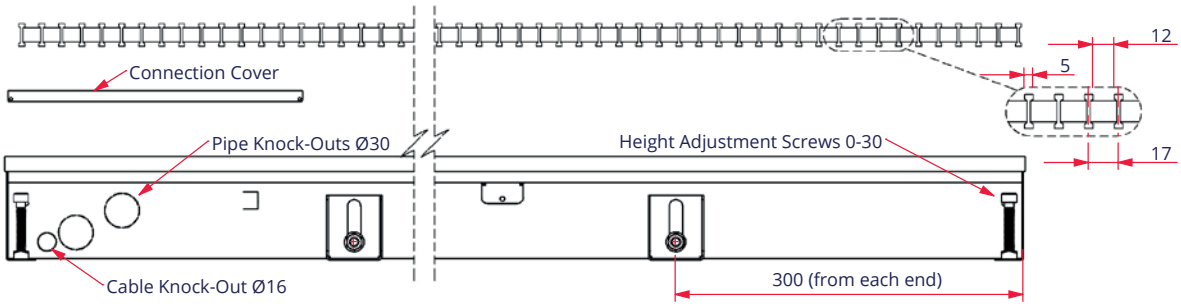

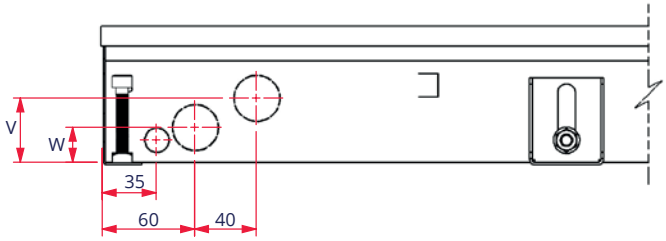

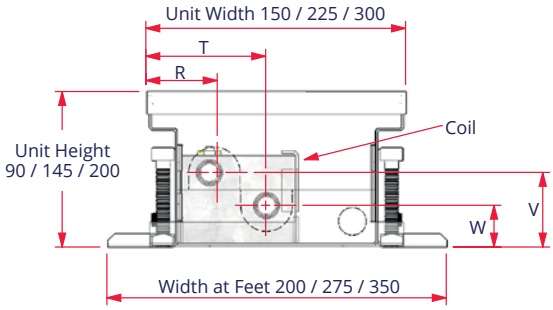

Width (mm)	Height (mm)	Vertical distance between water flow knock-out & bottom (mm)	Vertical distance between water return knock-out & bottom (mm)	Horizontal distance between water flow knock-out & side (mm)	Horizontal distance between water return knock-out & side (mm)
		V	W	R	T
150	90	43	24	39	69
225	90	43	24	39	69
300	90	43	24	39	135
150	145	98	41	39	69
225	145	98	41	69	102
300	145	98	41	102	135
150	200	153	58	39	69
225	200	153	58	69	102
300	200	153	58	102	135

S & P Coil Products Limited reserves the right to amend specification without any notice, whilst pursuing a policy of continual improvements in performance and design

Powered Trench

Connections & Dimensions

Connections can be front or side entry

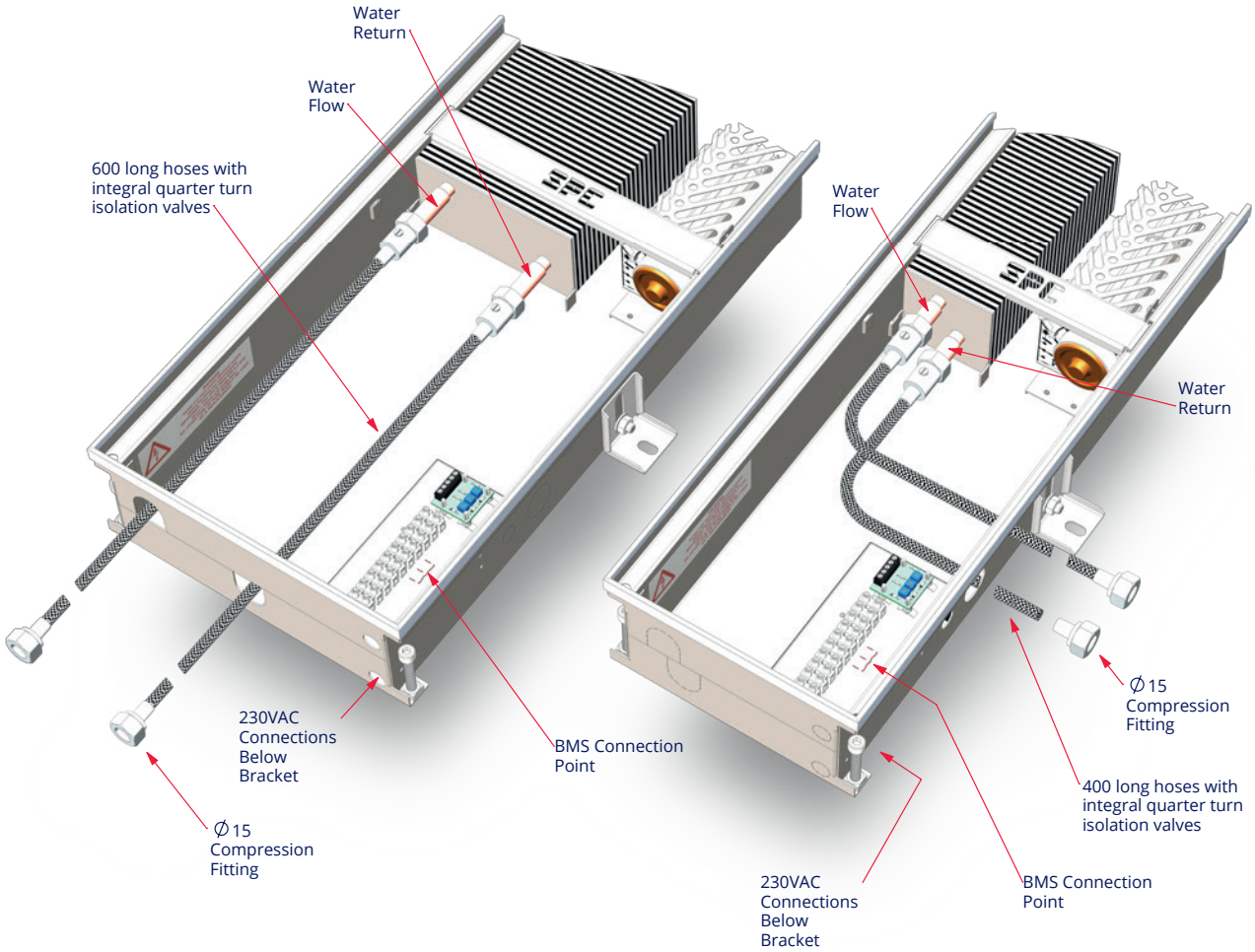

*Hose lengths are approximate.

Dimensions

- 4x widths – 180mm, 225mm, 260mm and 300mm
- Single 110mm height
- 22x lengths – 1100mm to 3200mm in 100mm increments

Easily create longer runs by connecting together using flangeless end plates.

S & P Coil Products Limited reserves the right to amend specification without any notice, whilst pursuing a policy of continual improvements in performance and design

Heat outputs

For information on outputs for other conditions contact SPC's sales team.

LPHW = 80/60°C & Room Air Temperature = 20°C (ΔT = 50°C), Medium Speed

	Trench Width (mm)			
Trench Length (mm)	180mm	225mm	260mm	300mm
1100	470	782	971	1091
1200	494	813	1003	1129
1300	518	844	1036	1167
1400	542	875	1068	1205
1500	566	906	1100	1243
1600	590	937	1132	1281
1700	932	1553	1931	2169
1800	956	1584	1963	2207
1900	980	1615	1996	2245
2000	1004	1646	2028	2283
2100	1028	1677	2060	2321
2200	1052	1708	2092	2359
2300	1394	2324	2891	3247
2400	1418	2355	2923	3285
2500	1442	2386	2956	3323
2600	1466	2417	2988	3361
2700	1490	2448	3020	3399
2800	1514	2479	3052	3437
2900	1538	2510	3084	3475
3000	1562	2541	3117	3513
3100	1586	2572	3149	3551

Heat output in W.

Sound pressure level
Medium speed < 30dBA @ 2m

Water flow rate calculated as follows:
Water flow rate (l/s) = Heat output (W)/4190/Water temperature drop (°C)

S & P Coil Products Limited reserves the right to amend specification without any notice, whilst pursuing a policy of continual improvements in performance and design

Water pressure drop

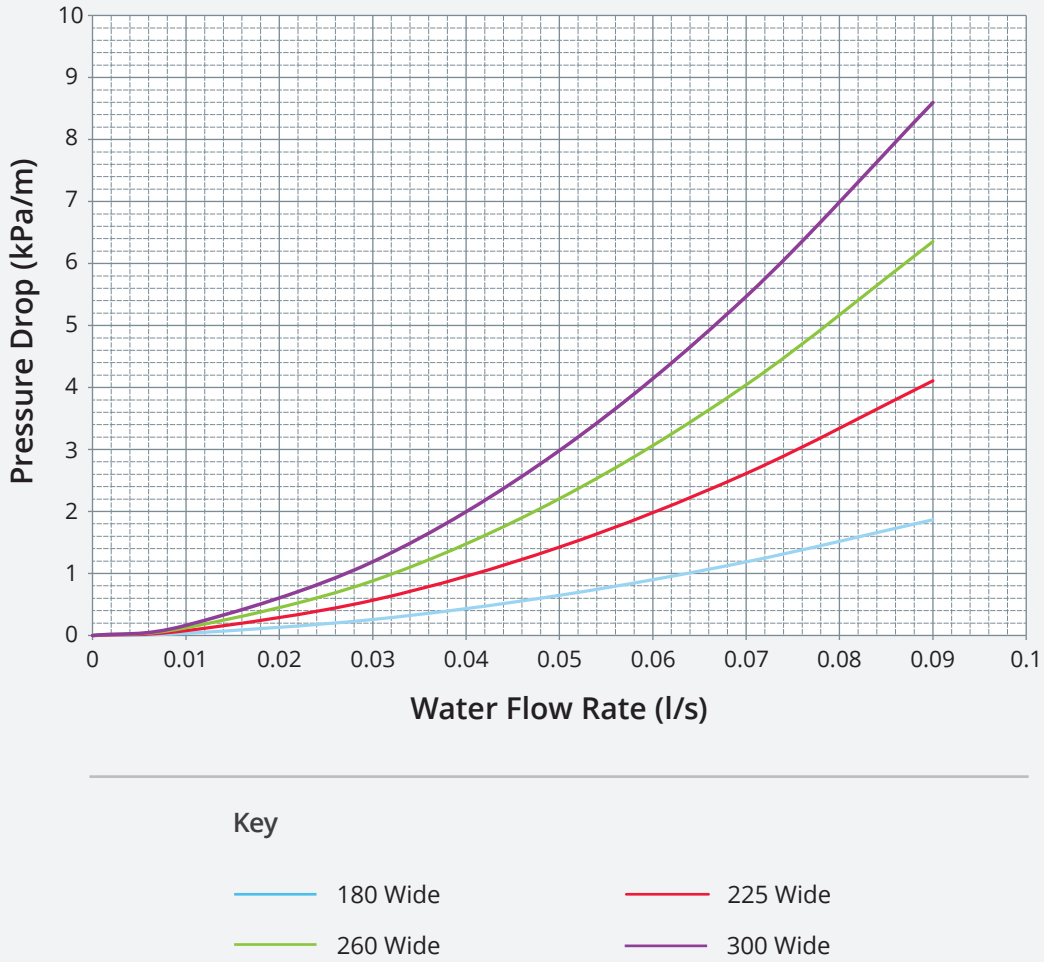

Water pressure drop in kPa per metre run of trench.

S & P Coil Products Limited reserves the right to amend specification without any notice, whilst pursuing a policy of continual improvements in performance and design

Dimensional drawings

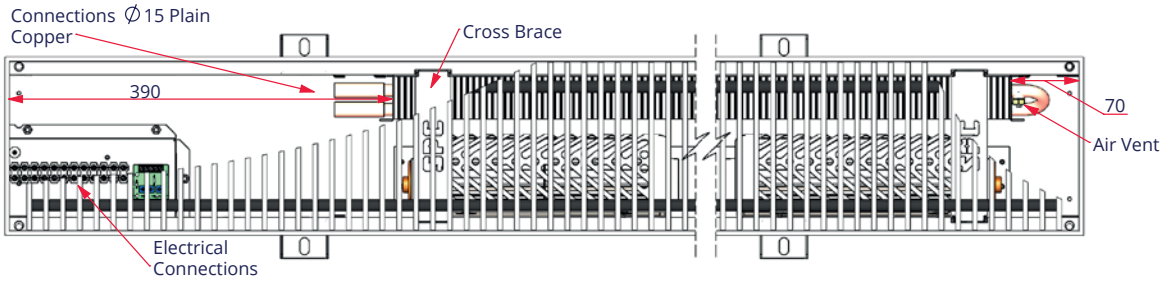

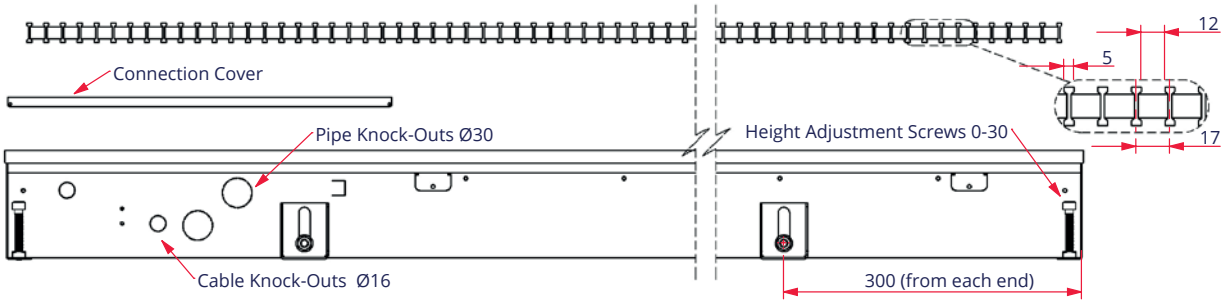

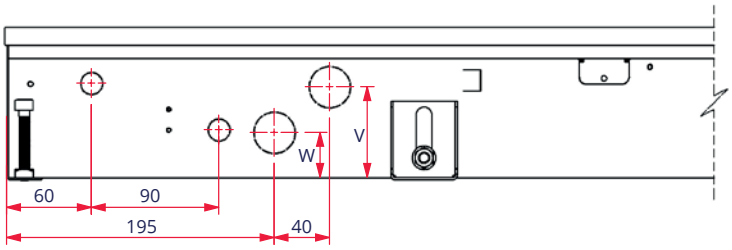

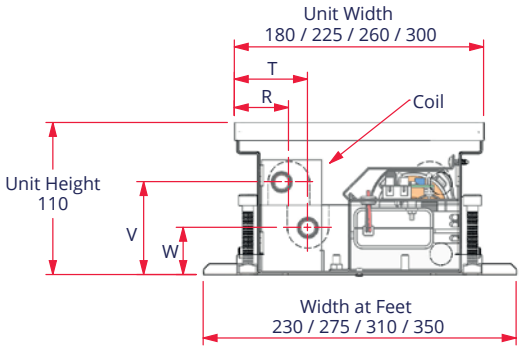

Width (mm)	Height (mm)	Vertical distance between water flow knock-out & bottom (mm)	Vertical distance between water return knock-out & bottom (mm)	Horizontal distance between water flow knock-out & side (mm)	Horizontal distance between water return knock-out & side (mm)
		V	W	R	T
180	110	67	34	39	53
225	110	67	34	53	71
260	110	67	34	53	110
300	110	67	34	53	148

S & P Coil Products Limited reserves the right to amend specification without any notice, whilst pursuing a policy of continual improvements in performance and design

Controls for comfort

Natural & Powered Trench Heaters

We've thought of everything you might need to enrich your environment...

All units can be supplied with flexible hoses for connecting to the flow / return pipework. These hoses can be fitted with isolating valves for added convenience.

Natural units are controlled on the water side and we offer a range of 2 port control valves and actuators along with a range of attractive wall mounted thermostats.

While powered units can be controlled on the water side and supplied with valves the inclusion of EC/DC fan motor technology makes air side control simple and accurate. Fan speed is set via a 0-10V control signal which can be supplied via a BMS or room mounted controller. Alternatively, the fan speed can be set manually using the on-board rotary potentiometers.

2 port Valve

Actuator

Modulo v2 Room Thermostat

Flexible Hose with Integral Isolating Valve

S & P Coil Products Limited reserves the right to amend specification without any notice, whilst pursuing a policy of continual improvements in performance and design

Specification

Natural & Powered Trench Heaters

- Trench casings shall be from a minimum 1.2mm thick mild steel finish in black powder coat. The trench shall be c/w knock-outs for pipework and cables where required. Fine adjustment levelling screws shall be provided at all four corners and adjustable support feet along the length of the casing. The casing shall be supplied with transverse bracing pieces and a protective cover.
- The heat exchanger shall be manufactured from an array of copper tubes expanded into aluminium fins supported in galvanised sheet steel tubeplates. Flow and return connections shall be 15mm plain copper and the heat exchanger shall be fitted with a vent plug to purge air. Prior to fitting, the heat exchanger shall be pressure tested to 22 barg, air under water.
- Trench units shall be supplied, as standard, with anodised aluminium roll-up type grilles. The grilles shall consist of the aluminium blades, stainless steel springs and plastic spacers coloured to match the blades. Blades are optionally available in a range of anodised colours and can be provided in stainless steel. Trim pieces shall be supplied for fitting around the edge of the trench casing to match the grille.
- The units shall be performance tested in line with the requirements of EN 16430 and shall comply with all relevant European safety directives and harmonised standards.
- Trench units can optionally be supplied with a range of flexible hose fittings, control valves and thermostats to suit the application.

Do you require a bespoke fit?

- Bespoke widths, heights and lengths are available on request
- Also available on request are bespoke curved sections and grilles
- Corner kits with angled sections and mitred corner grilles are available as required.

Please don't hesitate to contact a member of the SPC sales team who will be more than happy to help you find the components you need to make your trench heating system perfect for its environment.

S & P Coil Products Limited reserves the right to amend specification without any notice, whilst pursuing a policy of continual improvements in performance and design

Metropolitan Powered Cooling Trench

Metropolitan Powered Cooling Trench units are specifically designed to enhance comfort and offset high solar gains in large glazed areas. These units are installed beneath floor-to-ceiling windows, effectively eliminating heat gains by drawing warm air into the trench and passing it through a coil/heat exchanger. The air is then cooled and blown towards the window, establishing a continuous circulation of treated warm air throughout the room.

Suitable for installation in both screeded and suspended floors, Metropolitan Powered Cooling Trench units offer versatility and can be utilised in a variety of settings, including offices, hotels, restaurants, and residential properties. They are available in two configurations: 4-pipe units, which incorporate water heating to eliminate cold draughts, and 2-pipe units, which can be used for heating in a changeover system.

Manufactured in Leicester, UK, these units undergo rigorous independent testing to meet the stringent standards set by BS EN 16430. With their ability to reduce solar gains and create a heightened level of comfort, Metropolitan Powered Cooling Trench units are the ideal choice for spaces with large glazed areas. They provide efficient cooling capabilities and improved controllability, ensuring optimal comfort in diverse settings.

S & P Coil Products Limited reserves the right to amend specification without any notice, whilst pursuing a policy of continual improvements in performance and design

Cooling Trench

Connections & Dimensions

Connections can be front or side entry

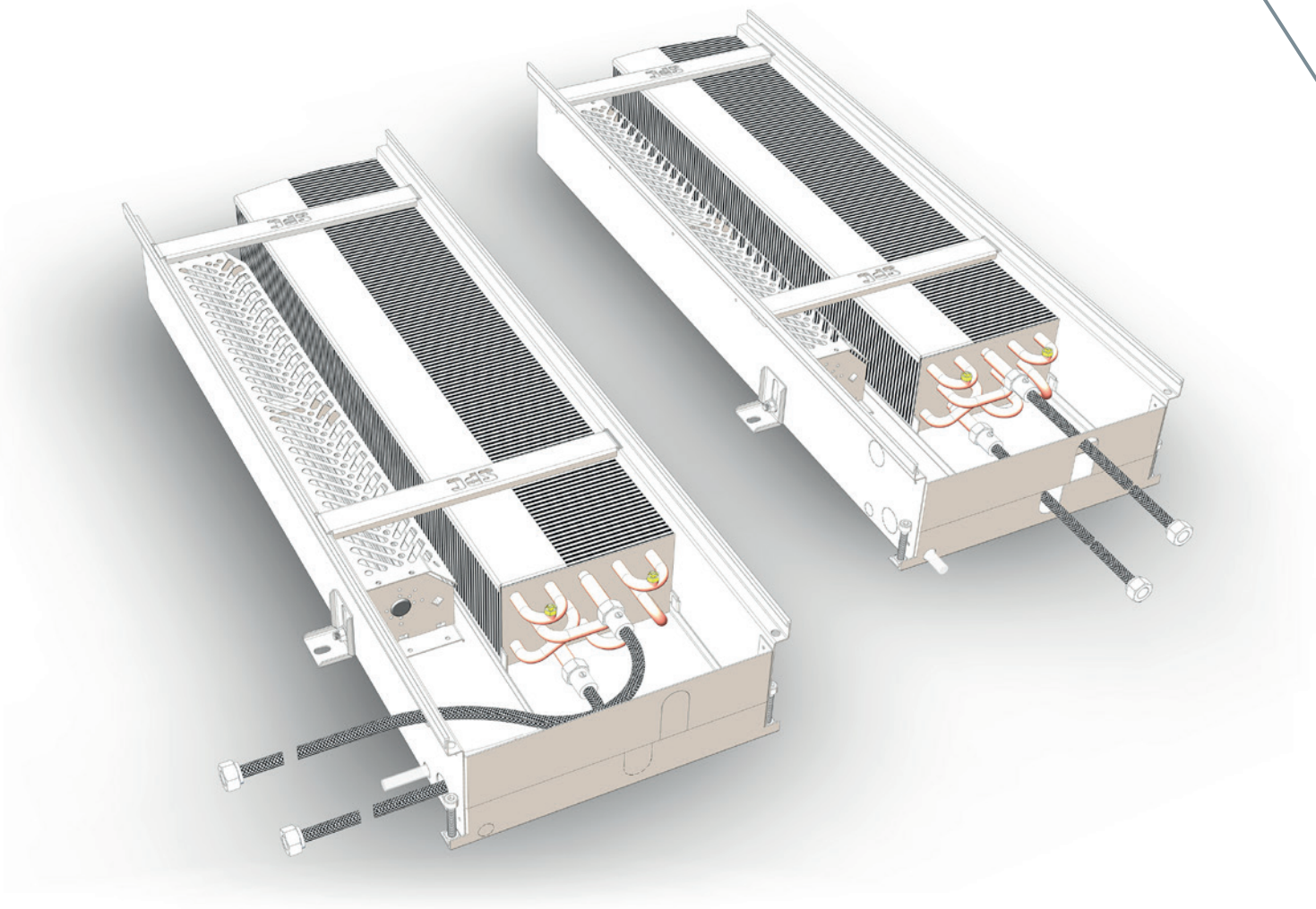

The above shows a detail of a 360 x 150 size unit highlighting that the water connections can enter the unit from the front of the unit (opposite to window) or from the side of the unit. Knock-outs are provided on the front and side and these can be removed to suit the site requirement. Note that the sketch above just shows the cooling connections and that these are on the RHS looking from the room towards the window. For clarity the heating connections are not shown but will be found on the LHS of the trench unit.

If units are to be butted together in continuous runs then the connections to each individual section will need to be made from the front rather than from the side.

Dimensions

- Standard unit: 360mm wide x 150mm high
- Narrow unit: 270mm wide x 205mm high
- 21 x lengths – 1100mm to 3100mm in 100mm increments

Easily create longer runs by connecting together using flangeless end plates.

S & P Coil Products Limited reserves the right to amend specification without any notice, whilst pursuing a policy of continual improvements in performance and design

Cooling outputs

For information on outputs for other conditions contact SPC's sales team.

360mm wide x 150mm high unit

	Clg[1]			Clg[2]			Htg[1]			Htg[2]		
	Fan speed			Fan speed			Fan speed			Fan speed		
Trench length (mm)	Low	Med	High	Low	Med	High	Low	Med	High	Low	Med	High
1100	288	436	549	484	735	927	442	679	858	226	344	434
1200	295	443	556	499	751	943	462	699	878	233	352	441
1300	303	451	564	515	767	959	482	719	898	241	359	449
1400	310	458	571	531	782	975	502	739	918	248	367	456
1500	318	466	579	547	798	990	522	759	938	256	374	464
1600	325	473	586	562	814	1006	542	779	958	264	382	472
1700	590	886	1112	997	1500	1884	922	1396	1754	466	703	882
1800	597	893	1119	1013	1516	1900	942	1416	1774	473	710	889
1900	605	901	1127	1029	1532	1916	962	1436	1794	481	718	897
2000	612	908	1134	1044	1547	1932	982	1456	1814	488	725	904
2100	620	916	1142	1060	1563	1947	1002	1476	1834	496	733	912
2200	627	923	1149	1076	1579	1963	1022	1496	1854	504	741	920
2300	892	1336	1675	1510	2265	2842	1402	2113	2650	706	1061	1330
2400	899	1343	1682	1526	2281	2857	1422	2133	2670	713	1069	1337
2500	907	1351	1690	1542	2297	2873	1442	2153	2690	721	1076	1345
2600	914	1358	1697	1558	2312	2889	1462	2173	2710	728	1084	1352
2700	922	1366	1705	1573	2328	2905	1482	2193	2730	736	1091	1360
2800	929	1373	1712	1589	2344	2920	1502	2213	2750	744	1099	1368
2900	937	1381	1720	1605	2360	2936	1522	2233	2770	751	1107	1375
3000	944	1388	1727	1621	2376	2952	1542	2253	2790	759	1114	1383
3100	952	1396	1735	1637	2391	2968	1562	2273	2810	766	1122	1390

270mm wide x 205mm high unit

	Clg[1]			Clg[2]			Htg[1]			Htg[2]		
	Fan speed			Fan speed			Fan speed			Fan speed		
Trench length (mm)	Low	Med	High	Low	Med	High	Low	Med	High	Low	Med	High
1100	216	327	412	363	551	695	309	475	601	158	241	303
1200	221	332	417	374	563	707	323	489	615	163	246	309
1300	227	338	423	386	575	719	337	503	629	169	252	314
1400	233	344	428	398	587	731	351	517	643	174	257	319
1500	239	350	434	410	599	743	365	531	657	179	262	325
1600	244	355	440	422	611	755	379	545	671	184	267	330
1700	443	665	834	748	1125	1413	645	977	1228	326	492	617
1800	448	670	839	760	1137	1425	659	991	1242	331	497	622
1900	454	676	845	772	1149	1437	673	1005	1256	337	503	628
2000	459	681	851	783	1160	1449	687	1019	1270	342	508	633
2100	465	687	857	795	1172	1460	701	1033	1284	347	513	638
2200	470	692	862	807	1184	1472	715	1047	1298	352	518	643
2300	669	1002	1256	1133	1699	2132	981	1479	1855	494	743	930
2400	674	1007	1262	1145	1711	2143	995	1493	1869	499	748	936
2500	680	1013	1268	1157	1723	2155	1009	1507	1883	505	754	941
2600	686	1019	1273	1169	1734	2167	1023	1521	1897	510	759	946
2700	692	1025	1279	1180	1746	2179	1037	1535	1911	515	764	952
2800	697	1030	1284	1192	1758	2190	1051	1549	1925	520	769	957
2900	703	1036	1290	1204	1770	2202	1065	1563	1939	526	775	962
3000	708	1041	1295	1216	1782	2214	1079	1577	1953	531	780	968
3100	714	1047	1301	1228	1793	2226	1093	1591	1967	536	785	973

Notes:

Cooling/heating outputs shown in W
Clg1 based on CHW = 13/17°C & room air temperature = 25°C (ΔT = 10°C)
Clg2 based on CHW = 6/10°C & room air temperature = 25°C (ΔT = 17°C)
Htg1 based on LPHW = 80/60°C & room air temperature = 20°C (ΔT = 50°C)
Htg2 based on LPHW = 50/40°C & room air temperature = 20°C (ΔT = 25°C)

Water flow rate calculated as follows:
Water flow rate (l/s) = Clg or Htg output (W) / 4190 / Water temperature rise or drop (°C)
Water pressure drop (per m of trench) read from chart based on water flow rate calculated as above
Sound pressure levels < 30 dBa @ 2m @ medium speed Data is for 4 pipe units.

S & P Coil Products Limited reserves the right to amend specification without any notice, whilst pursuing a policy of continual improvements in performance and design

Water pressure drop

Cooling

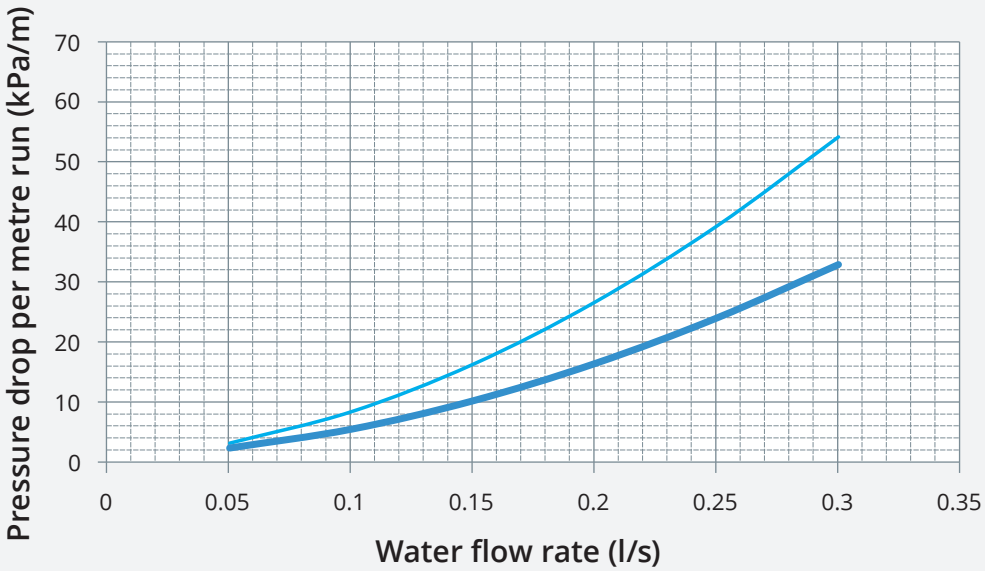

Key

360x150 270x205

Heating

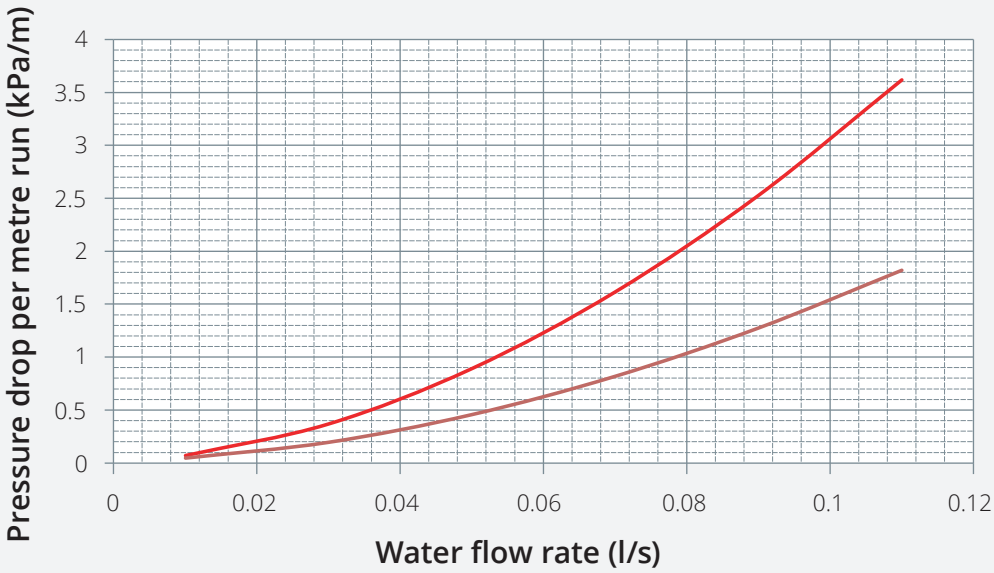

Key

360x150 270x205

Dimensional drawings 360W x150H unit

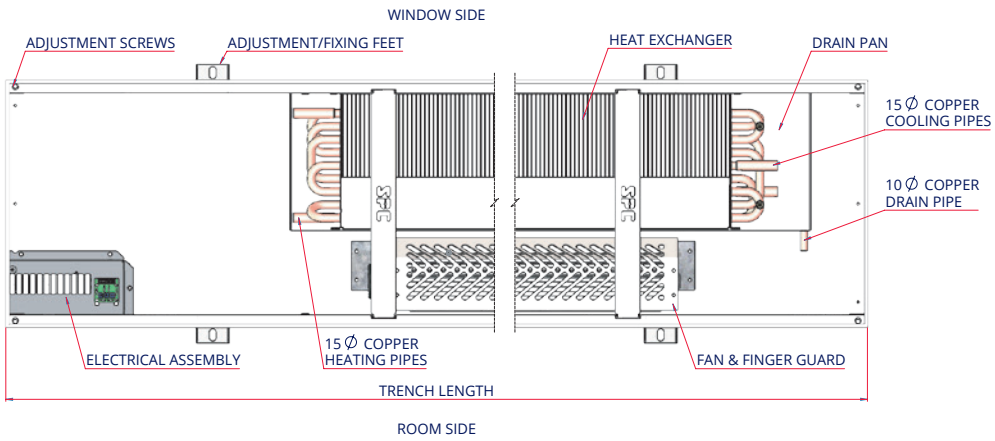

Top view of unit with grille removed

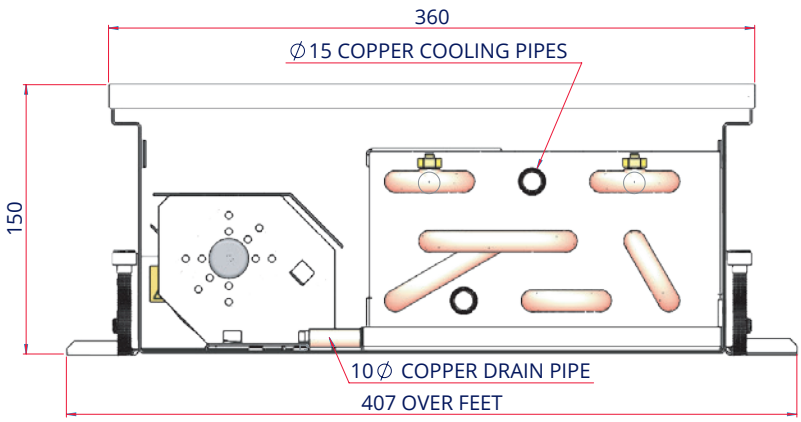

Cross section of side showing cooling pipes

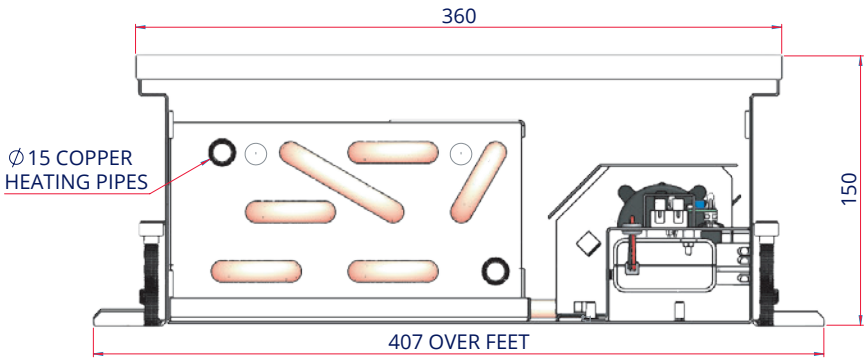

Cross section of side showing heating pipes

S & P Coil Products Limited reserves the right to amend specification without any notice, whilst pursuing a policy of continual improvements in performance and design

Dimensional drawings 270W x205H unit

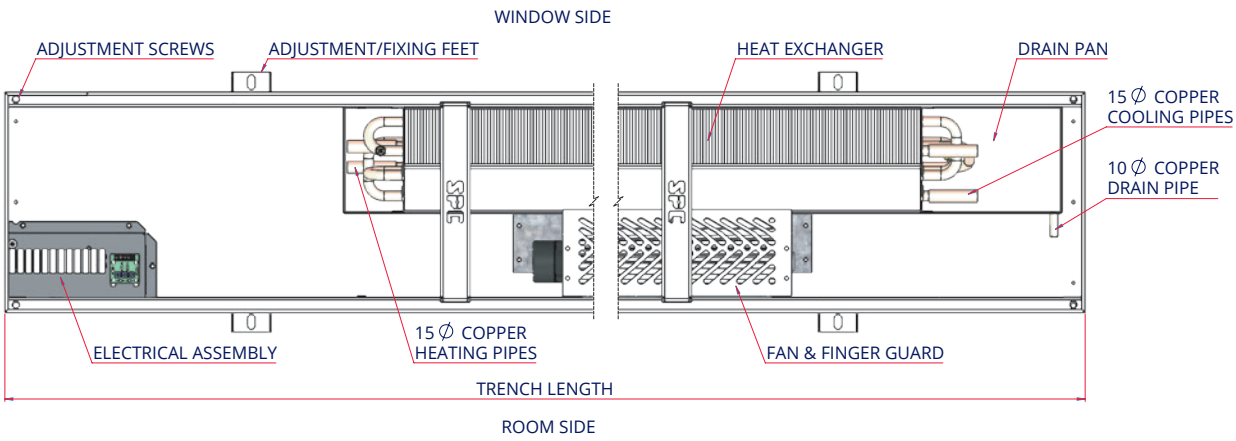

Top view of unit with grille removed

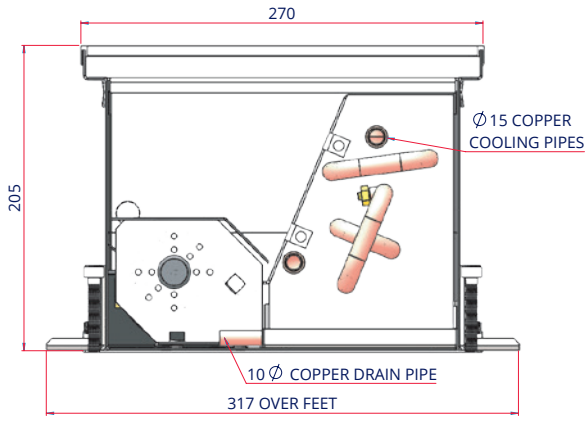

Cross section of side showing cooling pipes

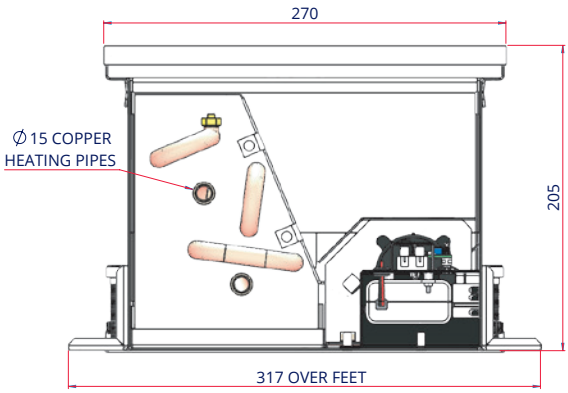

Cross section of side showing heating pipes

Controls for comfort

We've thought of everything you might need to enrich your environment...

All units can be supplied with flexible hoses for connecting to the flow / return pipework. These hoses can be fitted with isolating valves for added convenience.

While units can be controlled on the water side and supplied with valves the inclusion of EC/DC fan motor technology makes air side control simple and accurate. Fan speed is set via a 0-10V control signal which can be supplied via a BMS or room mounted controller. Alternatively, the fan speed can be set manually using the on-board rotary potentiometers.

Modulo v2 Room Thermostat

Flexible Hose with Integral Isolating Valve

Standard units are available in 4 pipe orientation. This means that there are separate waterways within the heat exchanger for cooling and for heating and each has its own set of connections. For 4 pipe units the heating and cooling pipes are found at opposite ends of the trench unit. By default, the heating pipes will be on the LHS when looking towards the window (at the same end as the electrical connections) and the cooling pipes will be on the RHS.

Units can be supplied in 2 pipe orientation whereby the entire heat exchanger is a single circuit. Such units can be used for cooling only applications or changeover systems for seasonal heating or cooling. The changeover would be controlled by a central controller/BMS as would the operation of the chiller/boiler/heat pump.

S & P Coil Products Limited reserves the right to amend specification without any notice, whilst pursuing a policy of continual improvements in performance and design

Specification

Cooling Trench

- Trench casings shall be from a minimum 1.2mm thick mild steel finish in black powder coat. The trench shall be c/w knock-outs for pipework and cables where required. Fine adjustment levelling screws shall be provided at all four corners and adjustable support feet along the length of the casing. The casing shall be supplied with transverse bracing pieces and a protective cover.
- The heat exchanger shall be manufactured from an array of copper tubes expanded into aluminium fins supported in galvanised sheet steel tubeplates. Flow and return connections shall be 15mm plain copper and the heat exchanger shall be fitted with a vent plug to purge air. Prior to fitting, the heat exchanger shall be pressure tested to 22 barg, air under water.
- Trench units shall be supplied, as standard, with anodised aluminium roll-up type grilles. The grilles shall consist of the aluminium blades, stainless steel springs and plastic spacers coloured to match the blades. Blades are optionally available in a range of anodised colours and can be provided in stainless steel. Trim pieces shall be supplied for fitting around the edge of the trench casing to match the grille.
- The units shall be performance tested in line with the requirements of EN 16430 and shall comply with all relevant European safety directives and harmonised standards.
- Trench units shall include one or more EC/DC crossflow fan assemblies. The fan speeds shall be capable of continuous modulation from a 0 to 10V control signal or on/off control. The fan assemblies shall be c/w with finger guards on the inlet side.
- Trench units can optionally be supplied with a range of flexible hose fittings, control valves and thermostats to suit the application.
- 4 pipe units shall have heating and cooling water connections on opposite ends.
- Electrical connections shall be made at the end of the trench accommodating the heating pipes.
- A stainless steel drain tray terminating in a 12mm copper pipe shall be fitted under the coil. The drain tray shall be extended under the cooling coil connections and the drain pipe shall be on this end..

Do you require a bespoke fit?

- Bespoke widths, heights and lengths are available on request
- Also available on request are bespoke curved sections and grilles
- Corner kits with angled sections and mitred corner grilles are available as required.

Please don't hesitate to contact a member of the SPC sales team who will be more than happy to help you find the components you need to make your trench conditioning system perfect for its environment.

S & P Coil Products Limited reserves the right to amend specification without any notice, whilst pursuing a policy of continual improvements in performance and design

Metropolitan Electric Trench Heating

Fan-assisted Electric Trench Heater

SPC Metropolitan Electric Trench Heating for use in the absence of an LTHW Heating System or where running pipework to a unit is not practical.

- Trench casings from 1.2mm thick mild steel finished in black powder coat. The trench is c/w knock-outs for cable entry. Fine adjustment levelling screws are provided at all four corners and adjustable support feet along the length of the casing. Height adjustment of 30mm is available. The casing is supplied with transverse bracing pieces and a protective cover for use during installation.
- The heat exchangers are single phase 230V electric heaters. The elements are ceramic PTC giving inherently safe, self-regulating performance c/w auto-resetting overheat cut-outs to trip the unit should the heating elements or casing become excessively hot.
- Trench units are supplied, as standard, with anodised aluminium roll-up type grilles. The grilles consist of the aluminium blades, stainless steel springs and black plastic spacers. Blades are optionally available in a range of anodised colours and can be provided in stainless steel. Trim pieces shall be supplied for fitting around the edge of the trench casing to match the grille.
- The trench units include one or more EC/DC crossflow fan assemblies. The fan speed is set at an appropriate level for the heat output to ensure that the elements are exposed to sufficient cooling air. The fan and element assemblies are shielded by perforated guards.
- The trench heaters are controlled on/off either by a room thermostat, switch or BMS enable signal.

Trench width (mm)	Trench height (mm)	Trench length (mm)	Heat output (kW)
225	125	1000	1.00
225	125	1750	2.00
225	125	2500	3.00

Table 1. Dimensions and heat output.

Key Features

- Wall Mounted or BMS Controls
- Quiet EC/DC Cross flow fans
- Wide range of Grille Finishes

S & P Coil Products Limited reserves the right to amend specification without any notice, whilst pursuing a policy of continual improvements in performance and design

Architectural grilles

We consider every aspect of the trench heater, including the grilles.

As standard, our roll-up anodised aluminium grilles use corrosion-proof steel springs and black spacers. The double-T profile grille blades are 5mm wide and 19.5mm high with a spacing of 12.5mm. This gives a free area of 60%. Grilles and trim are available in a variety of colours.

Pale Umber Anolok 541

Umber Anolok 543

Dark Umber Anolok 545

Bronze Anolok 547

Dark Bronze 549

Black Anolok 54B

Regency Gold 1

Regency Gold 2

Regency Gold 3

Satin Silver

Pale Blue/Grey Anolok 711

Light Blue / Grey 713

Med Blue/Grey Anolok 715

Dark Blue/Grey Anolok 717

Stainless Steel

*Stainless steel grilles are available on request. Grille trim is not available in stainless steel.

PART OF THE CARVER GROUP

SPC House
Evington Valley Road
Leicester
LE5 5LU

T: 0116 249 0044
E: spc@spc-hvac.co.uk
spc-hvac.co.uk