Metropolitan HC High-Powered Trench Heating and Cooling

SPC

Contents

		Page
1	Next Generation Fan-Assisted Trench Units	3
2	Performance	6
3	Electrical data	11
4	Noise	11
5	Controls	12
6	Accessories and Modifications	12
7	Grilles	13
8	Specification	14

S & P Coil Products Limited reserves the right to amend specification without any notice,
whilst pursuing a policy of continual improvements in performance and design

Next Generation Fan-Assisted Trench Units

Building on the previous ranges of SPC Metropolitan trench units, the HC range is designed to match the increasing demands of the commercial sector for air-conditioning units fitted within the floor. Units are finished with aluminium roll-up grilles, which are available in a number of finishes along with standard anodised aluminium. Stainless steel linear grilles can also be provided for higher end applications or for additional strength.

Trench units have traditionally been used to ensure buoyant warm air jets are thrown up alongside full height glazing to counteract the effects of cold down draughts. The benefits of unobtrusive heaters embedded in the floor have led to units being used to offset total heat losses and, increasingly, used for summertime cooling so as to provide a year round conditioning system. SPC HC Metropolitan units are available in heating only versions, cooling only versions or four pipe/two pipe heating and cooling configurations. The HC Metropolitan units are all fan-powered and do not rely on natural convection to provide the flow of heated air.

This latest range includes powerful fans/motors matched to coil heat exchangers designed to maximise the rate at which heat is added or removed from the space air. Unlike traditional models, where fans were used just to assist natural buoyancy in heating mode, the fans included in the Metropolitan HC range blow powerful jets of air through the heat exchanger and ensure separation between the inlet and outlet to prevent short-circuiting and air bypassing the heat exchanger.

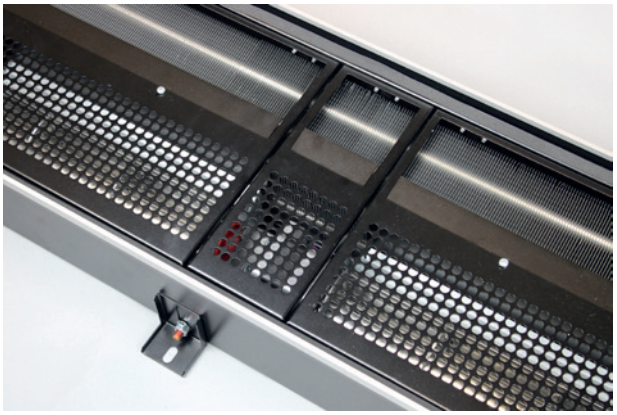

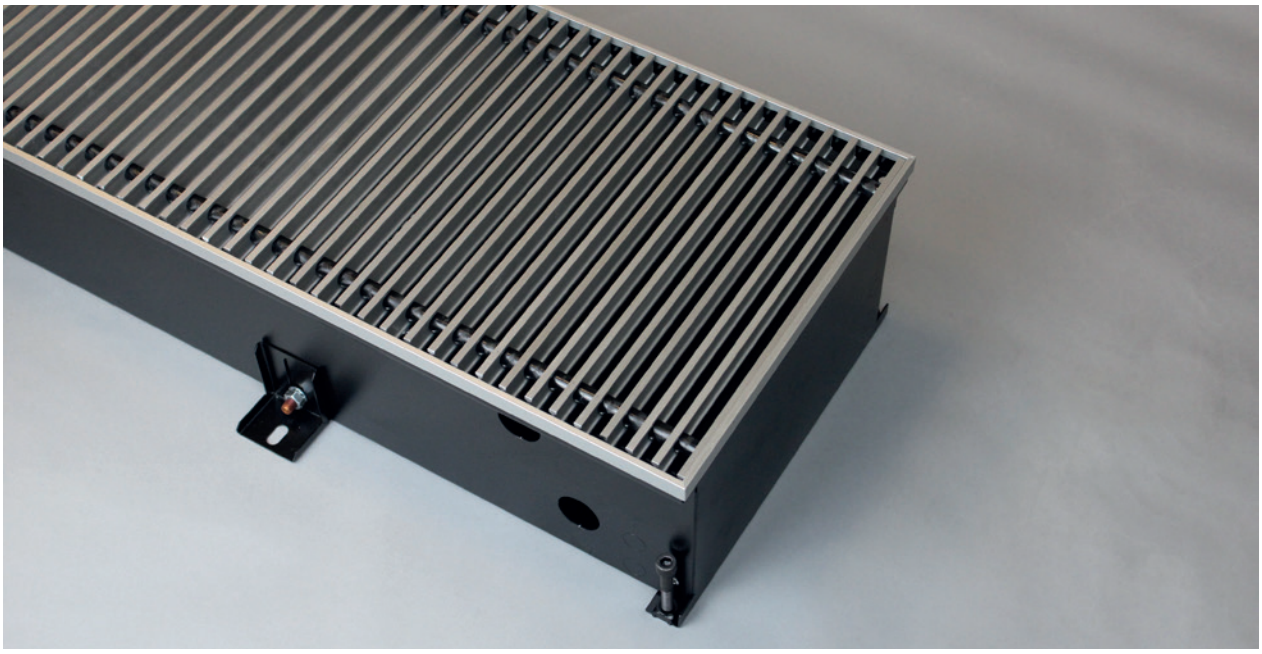

Fans are powered by direct coupled brushless DC motors to ensure the optimum in efficiency, noise generation and controllability. The brochure outlines the range of standard units available, but SPC should be contacted and would normally be able to accommodate any special requirements.

The standard range covers four combinations of height and width to suit your needs. A number of standard lengths are available for each size, though these can be adjusted to exactly match your requirement. While individual trench units are limited to 3m in length, they can be butted together in runs and piped up in parallel to precisely fill your available space. Roll-up grilles are used to cover the entire installation length.

The trench casings are supplied with adjustable load bearing mounting feet on both sides, which are used to affix the units to the floor or base of the trench. These feet are adjustable up to 30 mm. In addition, there are fine adjustment screws located at the four corners of the trench casing to level the units to the finished floor. Where units are to be housed in particularly deep trenches, then pedestals and mounting plates can be provided.

S & P Coil Products Limited reserves the right to amend specification without any notice, whilst pursuing a policy of continual improvements in performance and design

Dimensional details

Width (mm)	Height (mm)	Width at Feet (mm)
245	160	292
290	160	337
320	130	367
360	210	407

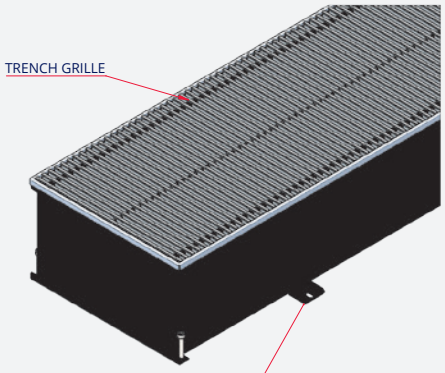

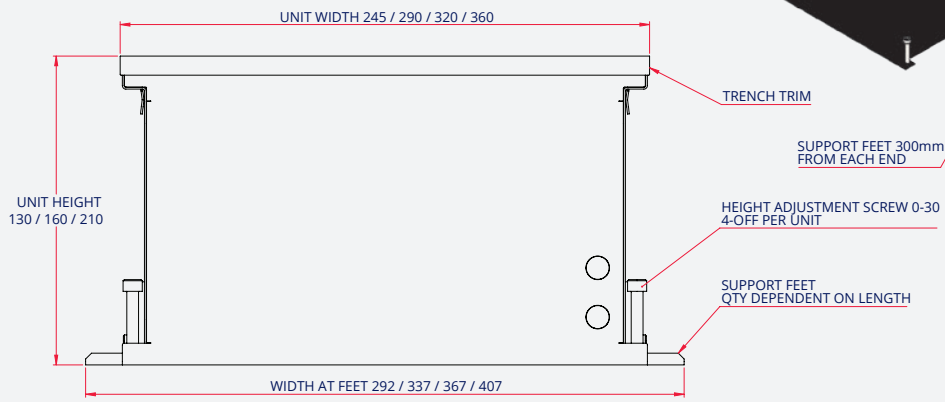

Note that, as shown, the fixing feet extend beyond the width of the unit and allowance must be made within the trench. Standard unit lengths are 900, 1200, 1500, 2000, 2300, 2600 and 3000mm, though non-standard trench lengths are available on request.

Standard unit arrangement; 2 pipe version shown.

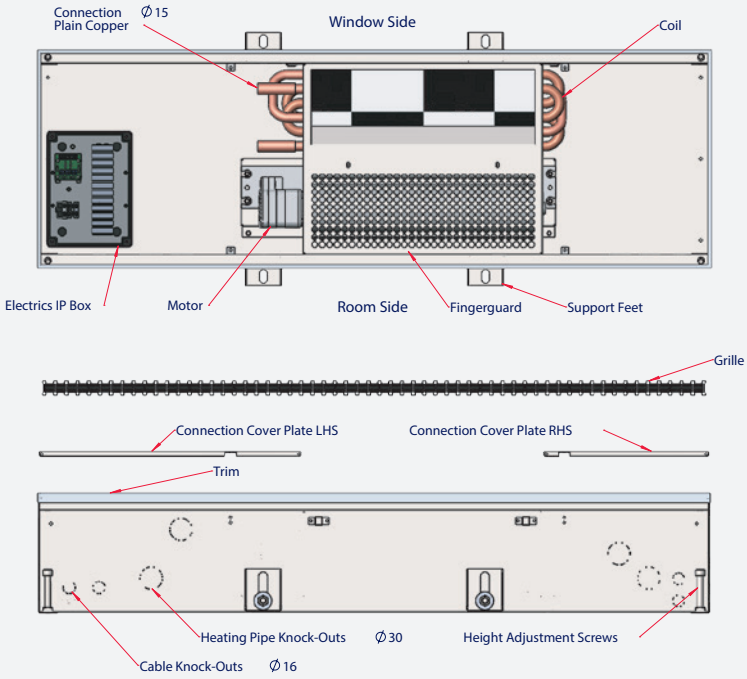

Performance

The tables below detail performance at a standard range of conditions. Data is given for the cases of 2-pipe heating, 2-pipe cooling, 4-pipe heating and 4-pipe cooling. For performance against the particular set of conditions that you are using, please contact SPC, who use bespoke selection software to precisely specify the performance of the units.

In cooling mode, if the chilled water temperatures are below the dewpoint of the entering air, then there is the risk of moisture being condensed on the finned surfaces of the coil. If this is the case, then units should be specified with integral drip trays. Condensate pumps can also be supplied with units if the moisture needs to be removed. Performance figures are based on dry cooling only but please contact SPC for estimates of total cooling duties if using low water temperatures and/or humid space air.

Many applications will be designed around dry cooling so as to remove the need to deal with condensate removal. In these instances, control of chilled water temperatures must be assured and consideration given to the use of moisture or humidity sensors on the pipework or in the space.

Note that the flowrates for lesser powered units are based on a recommended minimum of 0.04l/s for cooling and 0.02l/s for heating; the return water temperatures will show some variation based on this.

		4 pipe cooling						2 pipe cooling					
		16/18/27°C			7/12/27°C			16/18/27°C			7/12/27°C		
Length (mm)	Speed	Duty (W)	Flow (l/s)	PD (kPa)	Duty (W)	Flow (l/s)	PD (kPa)	Duty (W)	Flow (l/s)	PD (kPa)	Duty (W)	Flow (l/s)	PD (kPa)
900	Low	95	0.04	0.5	166	0.04	0.5	100	0.04	0.7	175	0.04	0.7
	Medium	150	0.04	0.5	263	0.04	0.5	158	0.04	0.7	277	0.04	0.7
	High	203	0.04	0.5	355	0.04	0.5	213	0.04	0.7	373	0.04	0.7
1200	Low	190	0.04	0.7	332	0.04	0.7	200	0.04	1.1	350	0.04	1.1
	Medium	300	0.04	0.7	526	0.04	0.7	316	0.04	1.1	554	0.04	1.1
	High	609	0.07	2.1	710	0.04	0.7	426	0.05	1.7	746	0.04	1.1
1500	Low	285	0.04	0.9	498	0.04	0.9	300	0.04	1.2	525	0.04	1.4
	Medium	450	0.05	1.6	789	0.04	0.9	474	0.06	2.7	831	0.04	1.4
	High	609	0.07	2.7	1065	0.05	1.4	639	0.08	4.6	1119	0.05	2.4
2000	Low	380	0.05	1.5	664	0.04	1.2	400	0.05	2.6	700	0.04	1.9
	Medium	600	0.07	3.5	1052	0.05	1.8	632	0.08	5.9	1108	0.05	3.1
	High	812	0.10	6.0	1420	0.07	3.2	852	0.10	10.1	1492	0.07	5.3
2300	Low	475	0.06	2.7	830	0.04	1.4	500	0.06	4.6	875	0.04	2.4
	Medium	750	0.09	6.2	1315	0.06	3.3	790	0.09	10.4	1385	0.07	5.5
	High	1015	0.12	10.7	1775	0.08	5.6	1065	0.13	17.8	1865	0.09	9.4
2600	Low	570	0.07	4.4	996	0.05	2.3	600	0.07	7.3	1050	0.05	3.9
	Medium	900	0.11	10.0	1578	0.08	5.3	948	0.11	16.7	1662	0.08	8.8
	High	1218	0.15	17.2	2130	0.10	9.0	1278	0.15	28.6	2238	0.11	15.0
3000	Low	665	0.08	6.8	1162	0.06	3.6	700	0.08	11.3	1225	0.06	6.0
	Medium	1050	0.13	15.4	1841	0.09	8.2	1106	0.13	25.8	1939	0.09	13.6
	High	1421	0.17	26.6	2485	0.12	14.0	1491	0.18	44.1	2611	0.12	23.3

Performance of 245x160 unit - cooling

S & P Coil Products Limited reserves the right to amend specification without any notice, whilst pursuing a policy of continual improvements in performance and design

		4 pipe heating						2 pipe heating					
		75/65/20°C			55/45/20°C			75/65/20°C			55/45/20°C		
Length (mm)	Speed	Duty (W)	Flow (l/s)	PD (kPa)	Duty (W)	Flow (l/s)	PD (kPa)	Duty (W)	Flow (l/s)	PD (kPa)	Duty (W)	Flow (l/s)	PD (kPa)
900	Low	360	0.02	0.1	216	0.02	0.1	545	0.02	0.2	327	0.02	0.2
	Medium	515	0.02	0.1	309	0.02	0.1	825	0.02	0.2	495	0.02	0.2
	High	645	0.02	0.1	387	0.02	0.1	1065	0.03	0.3	639	0.02	0.2
1200	Low	720	0.02	0.1	432	0.02	0.1	1090	0.03	0.5	654	0.02	0.3
	Medium	1030	0.02	0.1	618	0.02	0.1	1650	0.04	1.1	990	0.02	0.4
	High	1290	0.03	0.2	774	0.02	0.1	2130	0.05	1.7	1278	0.03	0.7
1500	Low	1080	0.03	0.2	648	0.02	0.1	1635	0.04	1.4	981	0.02	0.5
	Medium	1545	0.04	0.4	927	0.02	0.1	2475	0.06	2.9	1485	0.04	1.2
	High	1935	0.05	0.5	1161	0.03	0.2	3195	0.08	4.6	1917	0.05	1.8
2000	Low	1440	0.03	0.4	864	0.02	0.2	2180	0.05	3.0	1308	0.03	1.2
	Medium	2060	0.05	0.8	1236	0.03	0.3	3300	0.08	6.4	1980	0.05	2.5
	High	2580	0.06	1.2	1548	0.04	0.5	4260	0.10	10.1	2556	0.06	4.0
2300	Low	1800	0.04	0.8	1080	0.03	0.3	2725	0.07	5.3	1635	0.04	2.1
	Medium	2575	0.06	1.5	1545	0.04	0.6	4125	0.10	11.2	2475	0.06	4.5
	High	3225	0.08	2.2	1935	0.05	0.9	5325	0.13	17.8	3195	0.08	7.1
2600	Low	2160	0.05	1.3	1296	0.03	0.5	3270	0.08	8.6	1962	0.05	3.4
	Medium	3090	0.07	2.4	1854	0.04	1.0	4950	0.12	18.0	2970	0.07	7.2
	High	3870	0.09	3.6	2322	0.06	1.4	6390	0.15	28.6	3834	0.09	11.4
3000	Low	2520	0.06	2.0	1512	0.04	0.8	3815	0.09	13.2	2289	0.05	5.3
	Medium	3605	0.09	3.7	2163	0.05	1.5	5775	0.14	27.9	3465	0.08	11.1
	High	4515	0.11	5.6	2709	0.06	2.2	7455	0.18	44.1	4473	0.11	17.6

Performance of 245x160 unit - heating

		4 pipe cooling						2 pipe cooling					
		16/18/27°C			7/12/27°C			16/18/27°C			7/12/27°C		
Length (mm)	Speed	Duty (W)	Flow (l/s)	PD (kPa)	Duty (W)	Flow (l/s)	PD (kPa)	Duty (W)	Flow (l/s)	PD (kPa)	Duty (W)	Flow (l/s)	PD (kPa)
900	Low	120	0.04	0.7	210	0.04	0.7	126	0.04	1.0	221	0.04	1.0
	Medium	190	0.04	0.5	332	0.04	0.7	200	0.04	1.0	350	0.04	1.0
	High	255	0.04	0.5	446	0.04	0.7	268	0.04	1.0	469	0.04	1.0
1200	Low	240	0.04	1.1	420	0.04	0.7	252	0.04	1.5	442	0.04	1.5
	Medium	380	0.05	1.4	664	0.04	0.7	400	0.04	1.5	700	0.04	1.5
	High	510	0.06	2.3	892	0.04	0.8	536	0.06	3.5	938	0.04	1.8
1500	Low	360	0.04	1.6	630	0.04	0.8	378	0.05	2.4	663	0.04	1.9
	Medium	570	0.07	2.4	996	0.05	1.0	600	0.07	5.6	1050	0.05	2.9
	High	765	0.09	4.1	1338	0.06	1.7	804	0.10	9.4	1407	0.07	4.9
2000	Low	480	0.06	3.6	840	0.04	0.7	504	0.06	5.3	884	0.04	2.8
	Medium	760	0.09	8.2	1328	0.06	1.7	800	0.10	12.1	1400	0.07	6.4
	High	1020	0.12	13.9	1784	0.09	2.9	1072	0.13	20.5	1876	0.09	10.8
2300	Low	600	0.07	6.3	1050	0.05	1.1	630	0.08	9.3	1105	0.05	4.9
	Medium	950	0.11	14.5	1660	0.08	2.6	1000	0.12	21.4	1750	0.08	11.3
	High	1275	0.15	24.6	2230	0.11	4.3	1340	0.16	36.2	2345	0.11	19.1
2600	Low	720	0.09	10.2	1260	0.06	1.6	756	0.09	15.0	1326	0.06	7.9
	Medium	1140	0.14	23.2	1992	0.10	3.5	1200	0.14	34.4	2100	0.10	18.1
	High	1530	0.18	39.5	2676	0.13	6.0	1608	0.19	58.3	2814	0.13	30.7
3000	Low	840	0.10	15.7	1470	0.07	2.1	882	0.11	23.0	1547	0.07	12.2
	Medium	1330	0.16	35.9	2324	0.11	4.7	1400	0.17	52.9	2450	0.12	27.9
	High	1785	0.21	61.0	3122	0.15	8.0	1876	0.22	89.6	3283	0.16	47.2

Performance of 290x160 unit - cooling

		4 pipe heating						2 pipe heating					
		75/65/20°C			55/45/20°C			75/65/20°C			55/45/20°C		
Length (mm)	Speed	Duty (W)	Flow (l/s)	PD (kPa)	Duty (W)	Flow (l/s)	PD (kPa)	Duty (W)	Flow (l/s)	PD (kPa)	Duty (W)	Flow (l/s)	PD (kPa)
900	Low	450	0.02	0.1	270	0.02	0.1	625	0.02	0.2	375	0.02	0.3
	Medium	650	0.02	0.0	390	0.02	0.1	980	0.02	0.3	588	0.02	0.3
	High	830	0.02	0.1	498	0.02	0.1	1305	0.03	0.5	783	0.02	0.3
1200	Low	900	0.02	0.1	540	0.02	0.1	1250	0.03	0.6	750	0.02	0.3
	Medium	1300	0.03	0.2	780	0.02	0.1	1960	0.05	1.4	1176	0.03	0.8
	High	1660	0.04	0.3	996	0.02	0.1	2610	0.06	2.4	1566	0.04	1.3
1500	Low	1350	0.03	0.3	810	0.02	0.1	1875	0.04	1.8	1125	0.03	0.9
	Medium	1950	0.05	0.6	1170	0.03	0.2	2940	0.07	4.0	1764	0.04	2.1
	High	2490	0.06	0.9	1494	0.04	0.3	3915	0.09	6.6	2349	0.06	3.6
2000	Low	1800	0.04	0.6	1080	0.03	0.3	2500	0.06	3.9	1500	0.04	2.1
	Medium	2600	0.06	1.2	1560	0.04	0.5	3920	0.09	8.7	2352	0.06	4.7
	High	3320	0.08	1.9	1992	0.05	0.8	5220	0.12	14.5	3132	0.07	7.8
2300	Low	2250	0.05	1.2	1350	0.03	0.5	3125	0.07	6.8	1875	0.04	3.7
	Medium	3250	0.08	2.2	1950	0.05	0.9	4900	0.12	15.3	2940	0.07	8.2
	High	4150	0.10	3.5	2490	0.06	1.4	6525	0.16	25.6	3915	0.09	13.8
2600	Low	2700	0.06	1.9	1620	0.04	0.8	3750	0.09	10.9	2250	0.05	5.9
	Medium	3900	0.09	3.6	2340	0.06	1.5	5880	0.14	24.6	3528	0.08	13.2
	High	4980	0.12	5.7	2988	0.07	2.3	7830	0.19	41.2	4698	0.11	22.2
3000	Low	3150	0.08	2.9	1890	0.05	1.2	4375	0.10	16.9	2625	0.06	9.1
	Medium	4550	0.11	5.7	2730	0.07	2.3	6860	0.16	38.0	4116	0.10	20.4
	High	5810	0.14	8.8	3486	0.08	3.5	9135	0.22	63.6	5481	0.13	34.1

Performance of 290x160 unit - heating

S & P Coil Products Limited reserves the right to amend specification without any notice, whilst pursuing a policy of continual improvements in performance and design

		4 pipe cooling						2 pipe cooling					
		16/18/27°C			7/12/27°C			16/18/27°C			7/12/27°C		
Length (mm)	Speed	Duty (W)	Flow (l/s)	PD (kPa)	Duty (W)	Flow (l/s)	PD (kPa)	Duty (W)	Flow (l/s)	PD (kPa)	Duty (W)	Flow (l/s)	PD (kPa)
900	Low	103	0.04	0.7	180	0.04	0.7	108	0.04	1.0	189	0.04	1.0
	Medium	163	0.04	0.5	285	0.04	0.7	171	0.04	1.0	299	0.04	1.0
	High	214	0.04	0.5	375	0.04	0.7	225	0.04	1.0	394	0.04	1.0
1200	Low	206	0.04	1.1	360	0.04	0.7	216	0.03	0.7	378	0.04	1.5
	Medium	326	0.04	1.0	570	0.04	0.7	342	0.04	1.5	598	0.04	1.5
	High	428	0.05	1.7	750	0.04	0.6	450	0.05	2.5	788	0.04	1.3
1500	Low	309	0.04	1.2	540	0.04	0.7	324	0.04	1.8	567	0.04	1.9
	Medium	489	0.06	1.8	855	0.04	0.8	513	0.06	4.2	897	0.04	2.2
	High	642	0.08	3.0	1125	0.05	1.3	675	0.08	6.9	1182	0.06	3.6
2000	Low	412	0.05	2.7	720	0.04	0.7	432	0.05	4.0	756	0.04	2.1
	Medium	652	0.08	6.2	1140	0.05	1.3	684	0.08	9.1	1196	0.06	4.8
	High	856	0.10	10.1	1500	0.07	2.1	900	0.11	15.0	1576	0.08	7.9
2300	Low	515	0.06	4.8	900	0.04	0.8	540	0.06	7.1	945	0.05	3.7
	Medium	815	0.10	11.0	1425	0.07	1.9	855	0.10	16.1	1495	0.07	8.5
	High	1070	0.13	18.0	1875	0.09	3.2	1125	0.13	26.4	1970	0.09	13.9
2600	Low	618	0.07	7.7	1080	0.05	1.2	648	0.08	11.4	1134	0.05	6.0
	Medium	978	0.12	17.6	1710	0.08	2.7	1026	0.12	26.0	1794	0.09	13.6
	High	1284	0.15	28.8	2250	0.11	4.4	1350	0.16	42.6	2364	0.11	22.4
3000	Low	721	0.09	11.9	1260	0.06	1.6	756	0.09	17.5	1323	0.06	9.2
	Medium	1141	0.14	27.3	1995	0.10	3.6	1197	0.14	39.9	2093	0.10	21.0
	High	1498	0.18	44.5	2625	0.13	5.8	1575	0.19	65.4	2758	0.13	34.5

Performance of 320x130 unit - cooling

		4 pipe heating						2 pipe heating					
		75/65/20°C			55/45/20°C			75/65/20°C			55/45/20°C		
Length (mm)	Speed	Duty (W)	Flow (l/s)	PD (kPa)	Duty (W)	Flow (l/s)	PD (kPa)	Duty (W)	Flow (l/s)	PD (kPa)	Duty (W)	Flow (l/s)	PD (kPa)
900	Low	380	0.02	0.1	228	0.02	0.1	550	0.02	0.2	375	0.02	0.3
	Medium	540	0.02	0.1	324	0.02	0.1	845	0.02	0.2	588	0.02	0.3
	High	685	0.02	0.0	411	0.02	0.1	1105	0.03	0.4	783	0.02	0.3
1200	Low	760	0.02	0.1	456	0.02	0.1	1100	0.03	0.5	750	0.02	0.3
	Medium	1080	0.03	0.1	648	0.02	0.1	1690	0.04	1.1	1176	0.03	0.8
	High	1370	0.03	0.2	822	0.02	0.1	2210	0.05	1.8	1566	0.04	1.3
1500	Low	1140	0.03	0.2	684	0.02	0.1	1650	0.04	1.4	1125	0.03	0.9
	Medium	1620	0.04	0.4	972	0.02	0.2	2535	0.06	3.0	1764	0.04	2.1
	High	2055	0.05	0.6	1233	0.03	0.2	3315	0.08	4.9	2349	0.06	3.6
2000	Low	1520	0.04	0.5	912	0.02	0.2	2200	0.05	3.1	1500	0.04	2.1
	Medium	2160	0.05	0.9	1296	0.03	0.4	3380	0.08	6.6	2352	0.06	4.7
	High	2740	0.07	1.4	1644	0.04	0.5	4420	0.11	10.7	3132	0.07	7.8
2300	Low	1900	0.05	0.9	1140	0.03	0.3	2750	0.07	5.4	1875	0.04	3.7
	Medium	2700	0.06	1.6	1620	0.04	0.6	4225	0.10	11.7	2940	0.07	8.2
	High	3425	0.08	2.5	2055	0.05	1.0	5525	0.13	19.0	3915	0.09	13.8
2600	Low	2280	0.05	1.4	1368	0.03	0.6	3300	0.08	8.7	2250	0.05	5.9
	Medium	3240	0.08	2.6	1944	0.05	1.0	5070	0.12	18.8	3528	0.08	13.2
	High	4110	0.10	4.0	2466	0.06	1.6	6630	0.16	30.5	4698	0.11	22.2
3000	Low	2660	0.06	2.2	1596	0.04	0.9	3850	0.09	13.4	2625	0.06	9.1
	Medium	3780	0.09	4.1	2268	0.05	1.6	5915	0.14	29.1	4116	0.10	20.4
	High	4795	0.11	6.3	2877	0.07	2.5	7735	0.18	47.2	5481	0.13	34.1

Performance of 320x130 unit - heating

		4 pipe cooling						2 pipe cooling					
		16/18/27°C			7/12/27°C			16/18/27°C			7/12/27°C		
Length (mm)	Speed	Duty (W)	Flow (l/s)	PD (kPa)	Duty (W)	Flow (l/s)	PD (kPa)	Duty (W)	Flow (l/s)	PD (kPa)	Duty (W)	Flow (l/s)	PD (kPa)
900	Low	142	0.04	1.3	249	0.04	1.3	149	0.04	1.9	261	0.04	1.9
	Medium	236	0.04	1.3	413	0.04	1.3	248	0.04	1.9	434	0.04	1.9
	High	320	0.04	1.2	560	0.04	1.3	336	0.04	1.9	588	0.04	1.9
1200	Low	284	0.04	1.9	498	0.04	1.9	298	0.04	2.1	522	0.04	2.6
	Medium	472	0.06	3.5	826	0.04	1.8	496	0.06	5.2	868	0.04	2.7
	High	640	0.08	6.0	1120	0.05	3.2	672	0.08	8.9	1176	0.06	4.7
1500	Low	426	0.05	3.8	747	0.04	2.0	447	0.05	5.5	783	0.04	2.9
	Medium	708	0.08	9.4	1239	0.06	5.0	744	0.09	13.9	1302	0.06	7.3
	High	960	0.11	16.3	1680	0.08	8.6	1008	0.12	24.0	1764	0.08	12.6
2000	Low	568	0.07	8.2	996	0.05	4.3	596	0.07	12.0	1044	0.05	6.3
	Medium	944	0.11	20.5	1652	0.08	10.8	992	0.12	30.0	1736	0.08	15.8
	High	1280	0.15	35.5	2240	0.11	18.7	1344	0.16	51.8	2352	0.11	27.3
2300	Low	710	0.08	14.5	1245	0.06	7.7	745	0.09	22.3	1305	0.06	11.8
	Medium	1180	0.14	36.2	2065	0.10	19.1	1240	0.15	55.9	2170	0.10	29.4
	High	1600	0.19	62.7	2800	0.13	33.0	1680	0.20	96.5	2940	0.14	50.8
2600	Low	852	0.10	23.3	1494	0.07	12.3	894	0.11	35.7	1566	0.07	18.8
	Medium	1416	0.17	58.0	2478	0.12	30.5	1488	0.18	89.4	2604	0.12	47.0
	High	1920	0.23	100.4	3360	0.16	52.8	2016	0.24	154.4	3528	0.17	81.2
3000	Low	994	0.12	35.9	1743	0.08	18.9	1043	0.12	55.0	1827	0.09	29.0
	Medium	1652	0.20	89.5	2891	0.14	47.1	1736	0.21	137.7	3038	0.15	72.5
	High	2240	0.27	154.8	3920	0.19	81.5	2352	0.28	237.9	4116	0.20	125.2

Performance of 360x210 unit - cooling

		4 pipe heating						2 pipe heating					
		75/65/20°C			55/45/20°C			75/65/20°C			55/45/20°C		
Length (mm)	Speed	Duty (W)	Flow (l/s)	PD (kPa)	Duty (W)	Flow (l/s)	PD (kPa)	Duty (W)	Flow (l/s)	PD (kPa)	Duty (W)	Flow (l/s)	PD (kPa)
900	Low	575	0.02	0.1	345	0.02	0.1	745	0.02	0.4	447	0.02	0.5
	Medium	870	0.02	0.1	522	0.02	0.1	1225	0.03	1.1	735	0.02	0.4
	High	1150	0.03	0.2	690	0.02	0.1	1680	0.04	1.9	1008	0.02	0.7
1200	Low	1150	0.03	0.4	690	0.02	0.1	1490	0.04	2.1	894	0.02	0.8
	Medium	1740	0.04	0.7	1044	0.02	0.3	2450	0.06	5.1	1470	0.04	2.0
	High	2300	0.05	1.2	1380	0.03	0.5	3360	0.08	8.9	2016	0.05	3.6
1500	Low	1725	0.04	1.0	1035	0.02	0.4	2235	0.05	5.5	1341	0.03	2.2
	Medium	2610	0.06	2.1	1566	0.04	0.8	3675	0.09	13.6	2205	0.05	5.4
	High	3450	0.08	3.4	2070	0.05	1.4	5040	0.12	24.0	3024	0.07	9.6
2000	Low	2300	0.05	2.2	1380	0.03	0.9	2980	0.07	12.0	1788	0.04	4.8
	Medium	3480	0.08	4.5	2088	0.05	1.8	4900	0.12	29.3	2940	0.07	11.7
	High	4600	0.11	7.5	2760	0.07	3.0	6720	0.16	51.8	4032	0.10	20.7
2300	Low	2875	0.07	3.8	1725	0.04	1.5	3725	0.09	22.3	2235	0.05	8.9
	Medium	4350	0.10	8.1	2610	0.06	3.2	6125	0.15	54.7	3675	0.09	21.8
	High	5750	0.14	13.4	3450	0.08	5.3	8400	0.20	96.5	5040	0.12	38.5
2600	Low	3450	0.08	6.2	2070	0.05	2.5	4470	0.11	35.7	2682	0.06	14.2
	Medium	5220	0.12	13.0	3132	0.07	5.2	7350	0.18	87.4	4410	0.11	34.9
	High	6900	0.16	21.5	4140	0.10	8.6	10080	0.24	154.4	6048	0.14	61.6
3000	Low	4025	0.10	9.6	2415	0.06	3.8	5215	0.12	55.0	3129	0.07	21.9
	Medium	6090	0.15	20.2	3654	0.09	8.0	8575	0.20	134.7	5145	0.12	53.7
	High	8050	0.19	33.3	4830	0.12	13.3	11760	0.28	237.9	7056	0.17	94.8

Performance of 360x210 unit - heating

S & P Coil Products Limited reserves the right to amend specification without any notice, whilst pursuing a policy of continual improvements in performance and design

Electrical data

The range of units incorporates crossflow fans powered by high efficiency EC motors (brushless DC). The motors are 24V DC type, but the units themselves are supplied via a standard 230V AC supply, and an internal power supply rectifies and transforms to the required supply. If trench units are arranged for master/slave control, then each slave unit will need its own power supply. The table below details the power draw and SFP for the range of units.

Trench length (mm)	Low speed	Medium speed	High speed
900	3/0.16	5/0.14	9/0.16
1200	4/0.15	6/0.12	10/0.13
1500	5/0.15	8/0.13	12/0.13
2000	8/0.15	12/0.12	20/0.13
2300	9/0.15	14/0.13	22/0.13
2600	10/0.15	16/0.13	24/0.12
3000	13/0.15	21/0.13	33/0.13

Power draw (W) / SFP (W/l/s)

Electric data for all units

Noise

The HC range of units is whisper quiet in operation, allowing resultant noise levels with spaces to be maintained at exceptionally low levels. The noise rating data below is based on a typical environment that the units may be installed within, and is based on the assumptions given below the table. If a full acoustic analysis needs to be performed, please contact SPC, which can issue a full sound power spectrum based on independent testing.

Trench length (mm)	Low speed	Medium speed	High speed
900	17	22	30
1200	20	25	32
1500	19	25	35
2000	23	28	35
2300	23	28	37
2600	22	28	38
3000	24	29	39

Typical NR levels attributable to trench units
Based on a 100m3 room with a reverberation
Time of 0.5s and at a distance of 2m

Noise data for all units

Controls

HC Metropolitan units are designed to allow maximum flexibility in terms of their controls. The basic unit is suitable for control via a BMS/ supervisory system, which can control the fan speed via a 0-10V signal and can open/close valve actuators on both the heating and cooling circuits.

Control options can be provided to manually switch fan speeds and provide master/slave controls of multiple units. Controllers can be supplied which allow automatic control of the fan and the heating/cooling valves and include either an automatic or manual switch over from heating to cooling mode. If you have your own valves, controllers, etc., then SPC can wire the units to suit, or free issue equipment can be used where appropriate.

If PICV equipment is required with units, then the preferred embodiment would be to install these outside the casing of the trench units due to the volumes that they occupy. It may also be appropriate to allow a single control set to be used for a number of individual trench units. SPC can provide dummy sections to accommodate all requirements; these are empty trench lengths, including grilles to continue the aesthetic. Casings can also be extended where necessary if dummy sections are not deemed appropriate.

Accessories and Modifications

The basic unit ships without accessories to allow you to control as part of your site system. A range of control and other options are, however, available. The following is not an exhaustive list.

- Thermostats
- Controllers/thermostats
- On/off & speed control switches
- 24V valves and actuators
- Drip trays
- Condensate pumps

There are a number of physical adaptations and modifications that can be made to trenches. Please discuss your particular requirements with SPC, but the following are common requests:

- Angles and corner pieces
- Pipework within trench casings
- Linear stainless grilles
- Adjustable pedestals for inclusion in deeply excavated trenches
- Dummy sections
- Cut-outs for runs interrupted by pillars

In addition to the above, bespoke width and height units can usually be accommodated. Please contact SPC.

S & P Coil Products Limited reserves the right to amend specification without any notice, whilst pursuing a policy of continual improvements in performance and design

Grilles

The only part of a trench unit visible to the room is the grille. SPC offer, as standard, an attractive anodised aluminium roll-up grille to complement their units. This is constructed from 'I' shaped anodised aluminium bars held by stainless steel springs and black spacers.

The standard satin anodised grille can be substituted by a range of 'Anolok' coloured bar giving a spectrum of bronze/gold/blue tints.

For high end applications, or where a greater strength grille is required, the roll-up grille can be replaced by a linear stainless steel version; please contact SPC for options.

In most instances, trench units can be supplied without grilles to allow you to integrate your own architectural grille. Liaise with SPC regarding sizes so as to ensure that the trench is manufactured to the required size.

Pale Umber Anolok 541

Umber Anolok 543

Dark Umber Anolok 545

Bronze Anolok 547

Dark Bronze 549

Black Anolok 54B

Regency Gold 1

Regency Gold 2

Regency Gold 3

Satin Silver

Pale Blue/Grey Anolok 711

Light Blue / Grey 713

Med Blue/Grey Anolok 715

Dark Blue/Grey Anolok 717

Stainless Steel

*Stainless steel grilles are available on request. Grille trim is not available in stainless steel.

Specification

- Trench casings shall be from 1.2mm thick mild steel finished in black powder coat. The casing will be complete with knock-outs for pipe and cable connections where appropriate. Adjustable support feet shall be provided at appropriate intervals along both sides of the casing and fin adjustment screws incorporated at all four corners. Units are supplied with a protective cover which should be kept in place until the grilles are fitted.
- The heat exchanger will be a coil type constructed from copper tubes expanded into aluminium fins all supported in galvanised sheet steel tubeplates. Flow and return connections will all be from 15mm copper. For 4 pipe coils, the cooling pipe connections will be at the opposite end to the heating pipe connections. The heat exchanger will be fitted with a vent plug for purging air and leak tested to 22 bar air under water.
- As standard, trench units shall be supplied with anodised aluminium roll-up grilles. The standard grille is constructed from aluminium blades, stainless steel springs and plastic spacers. Trim pieces are provided for fitting around the edge of the trench lip surrounding the grille. Different anodised finishes are available along with stainless steel linear grille options.
- Units shall be performance tested in line with EN 16430 and comply with all relevant safety directives and standards. Certified noise data shall be available for all the operating speeds.
- Trench units shall include one or more close coupled brushless DC fan/motor assemblies. Fan speeds shall be modulated via a 0-10V control signal and inlets shall be protected by finger guards.
- For units required to provide 'wet' cooling a drain tray shall be provided below the heat exchanger. This will be supplied with a 15mm drain connection. A condensate pump can be supplied as an option should condensate need to be lifted or pumped considerable distances.

S & P Coil Products Limited reserves the right to amend specification without any notice, whilst pursuing a policy of continual improvements in performance and design

PART OF THE
CARVER
GROUP

SPC House
Evington Valley Road
Leicester
LE5 5LU

T: 0116 249 0044
E: spc@spc-hvac.co.uk
spc-hvac.co.uk